FLUKE®

Instruction Manual

For the benefit and convenience of its customers, Fluke Corporation (Fluke) has reproduced this copy of a manual which is no longer in production. This manual has not been edited or updated since the revision date shown on the *lower left hand corner of the first page*. Fluke will not be liable for any claims, losses or damages of any kind incurred by any user arising from use of this manual.

Model

6160A

Frequency Synthesizer

P/N 338392

MARCH 14, 1972

Rev. 3 1/76

NOTE

This manual documents the Model 7261A and its assemblies at the revision levels shown in Appendix 7A. If your instrument contains assemblies with different revision letters, it will be necessary for you to either update or backdate this manual. Refer to the supplemental change/errata sheet for newer assemblies, or to the backdating sheet in Appendix 7A for older assemblies.

WARRANTY

Notwithstanding any provision of any agreement the following warranty is exclusive:

The JOHN FLUKE MFG. CO., INC., warrants each instrument it manufactures to be free from defects in material and workmanship under normal use and service for the period of 1-year from date of purchase. This warranty extends only to the original purchaser. This warranty shall not apply to fuses, disposable batteries (rechargeable type batteries are warranted for 90-days), or any product or parts which have been subject to misuse, neglect, accident, or abnormal conditions of operations.

In the event of failure of a product covered by this warranty, John Fluke Mfg. Co., Inc., will repair and calibrate an instrument returned to an authorized Service Facility within 1 year of the original purchase; provided the warrantor's examination discloses to its satisfaction that the product was defective. The warrantor may, at its option, replace the product in lieu of repair. With regard to any instrument returned within 1 year of the original purchase, said repairs or replacement will be made without charge. If the failure has been caused by misuse, neglect, accident, or abnormal conditions of operations, repairs will be billed at a nominal cost. In such case, an estimate will be submitted before work is started, if requested.

THE FOREGOING WARRANTY IS IN LIEU OF ALL OTHER WARRANTIES, EXPRESS OR IMPLIED, INCLUDING BUT NOT LIMITED TO ANY IMPLIED WARRANTY OF MERCHANTABILITY, FITNESS, OR ADEQUACY FOR ANY PARTICULAR PURPOSE OR USE. JOHN FLUKE MFG. CO., INC., SHALL NOT BE LIABLE FOR ANY SPECIAL, INCIDENTAL, OR CONSEQUENTIAL DAMAGES, WHETHER IN CONTRACT, TORT, OR OTHERWISE.

If any failure occurs, the following steps should be taken:

1. Notify the JOHN FLUKE MFG. CO., INC., or nearest Service facility, giving full details of the difficulty, and include the model number, type number, and serial number. On receipt of this information, service data, or shipping instructions will be forwarded to you.

2. On receipt of the shipping instructions, forward the instrument, transportation prepaid. Repairs will be made at the Service Facility and the instrument returned, transportation prepaid.

SHIPPING TO MANUFACTURER FOR REPAIR OR ADJUSTMENT

All shipments of JOHN FLUKE MFG. CO., INC., instruments should be made via United Parcel Service or "Best Way"* prepaid. The instrument should be shipped in the original packing carton; or if it is not available, use any suitable container that is rigid and of adequate size. If a substitute container is used, the instrument should be wrapped in paper and surrounded with at least four inches of excelsior or similar shock-absorbing material.

CLAIM FOR DAMAGE IN SHIPMENT TO ORIGINAL PURCHASER

The instrument should be thoroughly inspected immediately upon original delivery to purchaser. All material in the container should be checked against the enclosed packing list. The manufacturer will not be responsible for shortages against the packing sheet unless notified immediately. If the instrument is damaged in any way, a claim should be filed with the carrier immediately. (To obtain a quotation to repair shipment damage, contact the nearest Fluke Technical Center.) Final claim and negotiations with the carrier must be completed by the customer.

The JOHN FLUKE MFG. CO., INC, will be happy to answer all applications or use questions, which will enhance your use of this instrument. Please address your requests or correspondence to: JOHN FLUKE MFG. CO., INC., P.O. BOX C9090, EVERETT, WASHINGTON 98206, ATTN: Sales Dept. For European Customers: Fluke (Holland) B.V., P.O. Box 5053, 5004 EB, Tilburg, The Netherlands.

*For European customers, Air Freight prepaid.

John Fluke Mfg. Co., Inc., P.O. Box C9090, Everett, Washington 98206

Table of Contents

SECTION	TITLE	PAGE
1	INTRODUCTION AND SPECIFICATIONS	1-1
	1-1. INTRODUCTION	1-1
	1-6. SPECIFICATIONS	1-1
2	OPERATING INSTRUCTIONS	2-1
	2-1. INTRODUCTION	2-1
	2-3. SHIPPING INFORMATION	2-1
	2-6. INPUT POWER	2-1
	2-8. INSTALLATION	2-1
	2-10. OPERATING FEATURES	2-2
	2-12. OPERATING NOTES	2-4
	2-13. AC Line Operation	2-4
	2-16. Drive Source	2-4
	2-19. External Amplitude Control	2-4
	2-21. INITIAL OPERATION	2-4
	2-22. Equipment Connections	2-4
	2-24. Operational Test	2-4
	2-27. OPERATION	2-5
	2-28. Frequency Selection	2-5
	2-30. Amplitude Control	2-5
	2-32. Fixed Output	2-5
	2-34. Remote Control	2-5
3	THEORY OF OPERATION	3-1
	3-1. INTRODUCTION	3-1
	3-3. BLOCK DIAGRAM ANALYSIS	3-1
	3-4. Introduction	3-1
	3-6. Simplified Block Diagram	3-1
	3-13. Functional Block Diagram	3-3
	3-33. CIRCUIT DESCRIPTIONS	3-7
	3-35. Front Panel Controls (6160A-4051)	3-7
	3-41. Power Supply (6160A-4014)	3-8
	3-48. 5 MHz Frequency Standard (6160A-4018)	3-9

3-130. 10 MHz D.U. Main P.D. Module (6160A-4109)

3-131. The 10 MHz D.U. Main P.D. Module (Drawing No. 6160A-1009) combines the 10 to 20 MHz output from the 1 MHz digit section with 10 to 20 MHz signals from the 10 MHz main loop. The resultant dc output then determines the frequency and phase of the 10 MHz main loop. A block diagram of the circuitry is shown in Figure 3-21.

3-132. The 10 to 20 MHz input from the 1 MHz digit section at J4 is translated to a symmetrical squarewave by differential limiter Q1 and Q2. Negative going inputs to Q1 cause it to conduct the maximum available current through R1. Transistor Q2 is cut-off during this period and no signal is developed in its collector. When the input to Q1 goes positive, it is cut-off and Q2 conducts the maximum current available through R1. The resulting 10 to 20 MHz squarewave at T1 is then coupled, via C7, to phase detector U1, where it functions as a switching input. Phase detector U1 receives a linear 10 to 20 MHz input from J3. This input is derived from the 10 MHz main loop. A low-pass filter consisting of C18 through C20 and L7 removes any ripple above 20 MHz.

3-133. Phase detector U1 combines the two 10 to 20 MHz inputs and produces an output that is the difference frequency. If both inputs are equal in frequency, the output is a dc voltage proportional to the cosine of the phase relationship between the two inputs. A low-pass filter consisting of C21, C22, C24, L8, and L9 removes any ripple above 7 MHz. The resulting difference frequency or dc voltage is applied, via R50, to J2. Presence of a dc voltage output from U1 (main loop phase-locked) causes FET gate Q19 to conduct which grounds the junction of R49 and R51. However, when the output of U1 exceeds 1 MHz, Q19 is cut-off and a dc voltage derived from the output of U2 is applied, via R49 and R51, to J2.

3-134. Amplifiers U3 through U5 control conduction of FET gate Q19 via AND gate CR15 through CR18. FET Q19 is conducting when the difference frequency output of U1 is less than 1 MHz. A difference frequency greater than 1 MHz turns off Q19 and makes available to J2 the dc output of U2 via R49 and R51. Beat note amplifier Q10 and Q11 amplify the difference frequency output of U1 which then initiates turn-off of Q19. The collector signal of Q11 is rectified by CR6 and CR7 to provide a positive dc input to U5. Operational amplifier U5 produces a positive output under this condition which turns off CR17. Sequential with this condition, U3 and U4 (to be described later) also produce positive outputs that turn off CR15 and CR16. With CR15 through CR17 off, CR19 conducts and the resulting voltage (0V) at the junction of CR18 and R48 turns off FET, Q19. The dc output from U2 is thus summed with the difference frequency output of U1 and made available to J2.

3-135. Comparison of the 1 MHz digit section signal (J4) and the 10 MHz main loop signal (J1 and J3) is done using

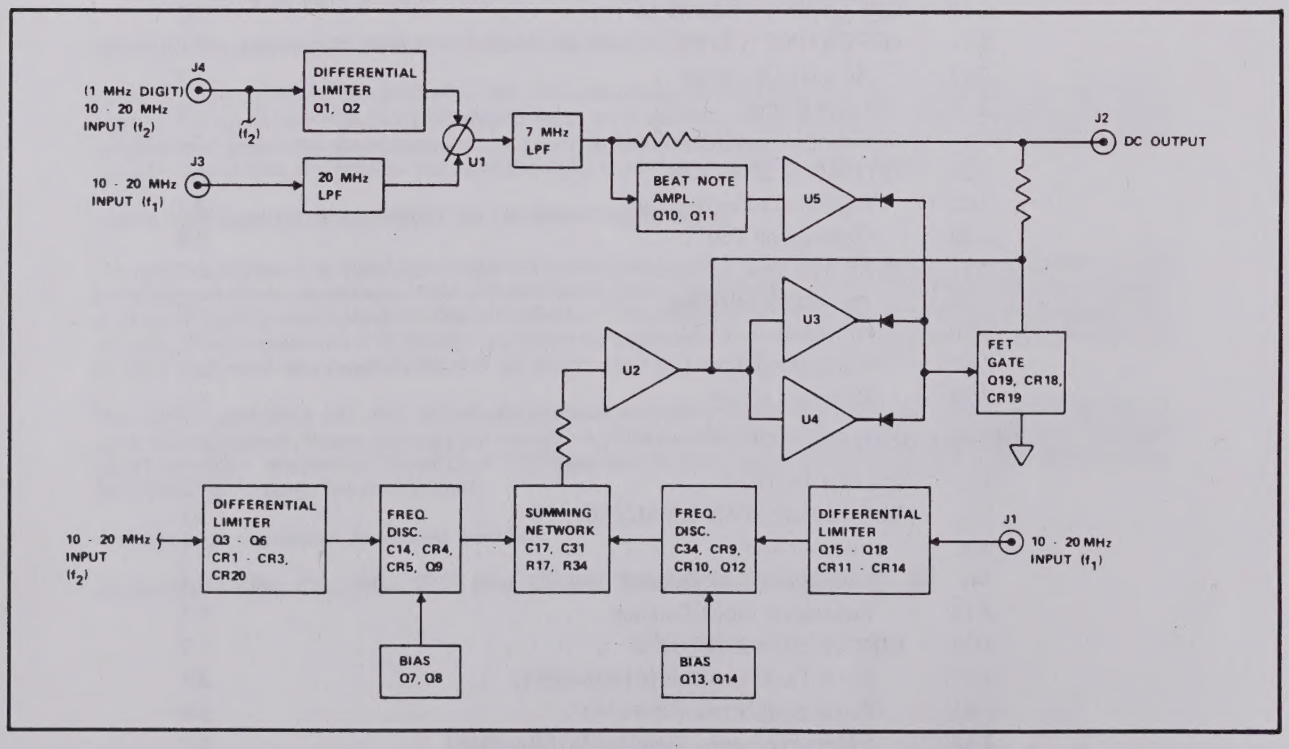

Figure 3-21. 10 MHz D.U. MAIN P.D. MODULE BLOCK DIAGRAM

TABLE OF CONTENTS, *continued*

SECTION	TITLE	PAGE
6	OPTION AND ACCESSORY INFORMATION	6-1
	6-1. FREQUENCY STANDARD, OPTION –01	6-1
	6-2. Introduction	6-1
	6-4. Operation	6-1
	6-6. Theory of Operation	6-1
	6-9. List of Replaceable Parts	6-1
	6-11. FREQUENCY STANDARD, OPTION –02	6-1
	6-13. RESOLUTION EXTENDER, OPTION –03	6-1
	6-15. REAR PANEL RF OUTPUT, OPTION –04	6-2
	6-17. RACK MOUNTING ACCESSORIES	6-2
7	GENERAL INFORMATION	7-1
8	SCHEMATIC DIAGRAMS	8-1

List of Illustrations

FIGURE	TITLE	PAGE
1-1.	Outline Drawing	1-3
2-1.	Rack Mounting Bracket Installation (M07-205-600)	2-1
2-2.	Chassis Slide Installation (M00-280-610)	2-2
2-3.	Operating Features	2-3
2-4.	Remote Frequency Control Connector Terminals	2-6
3-1.	Model 6160A Simplified Block Diagram	3-2
3-2.	Frequency Control Computer	3-4
3-3.	1 kHz Digit Unit	3-5
3-4.	10 MHz Digit Section	3-6
3-5.	Power Supply Block Diagram	3-8
3-6.	"Fold-Back" Current Limiting	3-9
3-7.	Input Filter Module Block Diagram	3-10
3-8.	Resolution Extender Block Diagram	3-11
3-9.	1 kHz D.U. Block Diagram	3-13
3-10.	N/1 Divider Block Diagram	3-14
3-11.	10 kHz D.U. Block Diagram	3-17
3-12.	100 kHz D.U. Block Diagram	3-18
3-13.	1 MHz D.U. Step Loop Module Block Diagram	3-19
3-14.	1 MHz Step Loop N/1 Divider	3-21
3-15.	1 MHz D.U. Main Loop VCO Module Block Diagram	3-22
3-16.	1 MHz D.U. IF Mixer Module Block Diagram.	3-23
3-17.	10 MHz D.U. Step Loop VCO Module Block Diagram (6160A-4107-1)	3-24
3-18.	VCO "Window" Voltage	3-26
3-19.	10 MHz D.U. Step Loop P.D. Module Block Diagram (6160A-4106-1)	3-27
3-20.	10 MHz D.U. IF Mixer Module Block Diagram	3-28
3-21.	10 MHz D.U. Main P.D. Module Block Diagram	3-29
3-22.	10 MHz D.U. Main Loop VCO Module Block Diagram	3-30
3-23.	Output Divider Module Block Diagram.	3-32
3-24.	Computer Assembly Block Diagram.	3-35
3-25.	Clock and Load Generator Waveshapes.	3-36

LIST OF ILLUSTRATIONS, *continued*

FIGURE	TITLE	PAGE
4-1.	Section Locations	4-3
4-2.	Section Locations, Bottom View, Divider Module Removed	4-4
4-3.	Adjustment, Test Point, and Input/Output Connector Locations (6160A-4101)	4-5
4-4.	Adjustment, Test Point, and Input/Output Connector Locations (6160A-4017)	4-6
4-5.	Adjustment, Test Point, and Input/Output Connector Locations (6160A-4002)	4-8
4-6.	Adjustment, Test Point, and Input/Output Connector Locations (6160A-4103)	4-11
4-7.	Adjustment, Test Point, and Input/Output Connector Locations (6160A-4104)	4-13
4-8.	Adjustment, Test Point, and Input/Output Connector Locations (6160A-4105)	4-14
4-9.	Adjustment, Test Point, and Input/Output Connector Locations (6160A-4109)	4-15
4-10.	Equipment Connections for 10 MHz D.U. Main P.D. Test	4-16
4-11.	Adjustment, Test Point, Input/Output Connector Locations (6160A-4206-1)	4-17
4-12.	Adjustment, Test Point, Input/Output Connector Locations (6160A-4107-1)	4-19
4-13.	Adjustment, Test Point, Input/Output Connector Locations (6160A-4108)	4-21
4-14.	Adjustment, Test Point, Input/Output Connector Locations (6160A-4110)	4-22
4-15.	Adjustment, Test Point, Input/Output Connector Locations (6160A-4111)	4-24
4-16.	Adjustment, Test Point, Input/Output Connector Locations (6160A-4014)	4-26
4-17.	Model 6160A Assembly Locations	4-27
5-1.	Model 6160A Frequency Synthesizer	5-7
5-2.	Front Panel Assembly, A1	5-11
5-3.	Front Panel PCB Assembly, A1A1	5-13
5-4.	10 MHz Main Loop VCO Module Assembly, A2	5-14
5-5.	10 MHz Main Loop VCO PCB Assembly, A2A1	5-18
5-6.	10 MHz Main Loop Phase Detector Module Assembly, A3	5-19
5-7.	10 MHz Main Loop Phase Detector PCB Assembly, A3A1	5-24
5-8.	10 MHz IF Mixer Module Assembly, A4	5-25
5-9.	10 MHz IF Mixer PCB Assembly, A4A1	5-30
5-10.	10 MHz Step Loop VCO Module Assembly, A5	5-31
5-11.	10 MHz Step Loop VCO PCB Assembly, A5A1	5-36
5-12.	10 MHz Step Loop Phase Detector Module Assembly, A6	5-37
5-13.	10 MHz Step Loop Phase Detector PCB Assembly, A6A1	5-43
5-14.	Input Filter Module Assembly, A7	5-44
5-15.	Input Filter PCB Assembly, A7A1	5-47
5-16.	1MHz Step Loop Module Assembly, A8	5-48
5-17.	1MHz Step Loop PCB Assembly, A8A1	5-52
5-18.	1MHz IF Mixer Module Assembly, A9	5-53
5-19.	1MHz IF Mixer PCB Assembly, A9A1	5-56
5-20.	1MHz Main Loop Module Assembly, A10	5-57
5-21.	1MHz Main Loop PCB Assembly, A10A1	5-62
5-22.	Output Divider Module Assembly, A11	5-63

LIST OF ILLUSTRATIONS, *continued*

FIGURE	TITLE	PAGE
5-23.	Output Divider PCB Assembly, A11A1	5-73
5-24.	Power Supply PCB Assembly, A12	5-78
5-25.	Riser PCB Assembly, A13	5-79
5-26.	Resolution Extender PCB Assembly, A14	5-83
5-27.	Internal Frequency Standard Assembly, A15	5-85
5-28.	1 - 100 kHz Digital Unit PCB Assembly, A16	5-103
5-29.	Computer PCB Assembly, A17	5-107
5-30.	Mother Board PCB Assembly, A18	5-108
5-31.	Transformer Enclosure Assembly, A19	5-110
5-32.	Rear Panel Assembly, A20	5-112
5-33.	Heat Sink Assembly, A21	5-114
8-1.	Model 6160A Troubleshooting Chart (6160A-1600)	8-3
8-2.	Model 6160A Block Diagram (6160A-1501)	8-5
8-3.	A1A1 Front Panel PCB Assembly (6160A-1051)	8-7
8-4.	A2A1 10 MHz Main Loop VCO PCB Assembly (6160A-1010)	8-9
8-5.	A3A1 10 MHz Main Loop Phase Detector PCB Assembly (6160A-1009)	8-11
8-6.	A4A1 10 MHz I.F. Mixer PCB Assembly (6160A-1008)	8-13
8-7.	A5A1 10 MHz Step Loop VCO PCB Assembly (6160A-1007-1)	8-15
8-8.	A6A1 10 MHz Step Loop Phase Detector PCB Assembly (6160A-1006-1)	8-17
8-9.	A7A1 Input Filter PCB Assembly (6160A-1001)	8-19
8-10.	A8A1 1 MHz Step Loop PCB Assembly (6160A-1003)	8-21
8-11.	A9A1 1 MHz I.F. Mixer PCB Assembly (6160A-1004)	8-23
8-12.	A10A1 1 MHz Main Loop PCB Assembly (6160A-1005)	8-25
8-13.	A11A1 Output Divider PCB Assembly (6160A-1011)	8-27
8-14.	A12 Power Supply PCB Assembly (6160A-1014)	8-29
8-15.	A14 Resolution Extender PCB Assembly, Option –13	8-31
8-16.	A15 Internal Frequency Standard Assembly, Option -01, -02 (6160A-1018)	8-33
8-17.	A16 1 - 100 kHz Digit Unit PCB Assembly (3 sheets) (6160A-1002)	8-35
8-18.	A17 Computer PCB Assembly (6160A-1012)	8-41
8-19.	A18 Mother Board PCB Assembly (6160A-1013)	8-43
8-20.	A20 Rear Panel Assembly (6160A-1052)	8-45

List of Tables

TABLE	TITLE	PAGE
1-1.	6160A Options	1-1
1-2.	6160A Specifications	1-2
3-1.	X2 Multiplier Input/Output Logic	3-36
4-1.	Required Test Equipment	4-1
4-2.	1 - 100 kHz Assembly Check	4-10
4-3.	1 MHz Step Loop Step Commands	4-12
4-4.	1 MHz D.U. Main Loop Test Checks	4-14
4-5.	Beat Signal Checks	4-18
4-6.	70 MHz thru 100 MHz Output Checks	4-20
4-7.	110 MHz thru 140 MHz Output Checks	4-20
4-8.	Output Level Checks	4-21
4-9.	Signal Level Checks	4-21
4-10.	Frequency Tracking Checks	4-23
4-11.	Tracking Limit Adjustments	4-23
4-12.	Output Divider Checks	4-24
4-13.	Output Divider Level Checks	4-24
4-14.	Interface Level	4-28
4-15.	6160A-4107-1, J4 Frequency	4-29
4-16.	J13 Voltages	4-29
4-17.	J10, J11 Voltages	4-29
7-1.	List of Abbreviations	7-1
7-2.	Federal Supply Codes for Manufacturers	7-3
7-3.	Fluke Technical Service Centers	7-10
7-4.	Sales Representatives - Domestic	7-11
7-5.	Sales Representatives - International	7-13

Section 1

Introduction & Specifications

1-1. INTRODUCTION

1-2. The Model 6160A Frequency Synthesizer produces a selectable signal of 1 to 160 MHz in two separate ranges: 1 to 12 MHz and 10 to 160 MHz. Resolution is 100 Hz in the 1 to 12 MHz range and 1 kHz in the 10 to 160 MHz range. The output signal level is adjustable from +3 to +13 dBm into 50 ohms using either a control on the front panel or a dc control voltage applied to a connector on the rear panel. The output signal level will be maintained to within ±1 dB.

1-3. Output frequency selection can be done directly from the front panel or electrically through a remote connector on the rear panel. Remote control input requirements are compatible with DTL or TTL logic using BCD coding. Logic levels are as follows:

Logic "0" = 0 to +0.95V dc or contact closure to logic ground. Maximum per line current sinking requirement is 1.6 mA.

Logic "1" = +2 to +5V dc or open circuit.

1-4. The synthesizer is completely solid-state and modular construction is used throughout for ease in maintenance. The chassis is designed for bench-top use or installation in a standard 19 inch equipment rack. Rack mounting brackets and chassis slides are available for rack mounting. Input power requirement is 115/230V ac ±10%, 50 to 500 Hz at approximately 80 watts.

1-5 Optional features are available to meet specific applications. These options are described in Table 1-1.

1-6. SPECIFICATIONS

1-7. Specifications for the Model 6160A are given in Table 1-2.

Table 1-1. 6160A OPTIONS

OPTION	DESCRIPTION
–01	Internal 5 MHz Standard. 1×10^{-8} per day drift rate.
–02	Internal 5 MHz Standard. 2×10^{-9} per day drift rate
–03	1 Hz Resolution – 10 to 160 MHz range 0.1 Hz Resolution – 1 to 12 MHz range
–04	Rear Output. BNC output connector on rear panel.

Table 1-2. 6160A SPECIFICATIONS

FREQUENCY

Ranges	1 MHz to 12 MHz	10 MHz to 160 MHz
Increments	100 Hz (Optional to .1 Hz)	1 kHz (Optional to 1 Hz)
Selection	Front panel rotary switches, remote BCD-TTL/DTL positive true logic or contact closures.	

SPURIOUS OUTPUTS

Non-Harmonic	Greater than 70 dB (to 100 dB) below fundamental.
Harmonics	Greater than 25 dB below fundamental.

SIGNAL TO NOISE RATIO (S/N) TYPICAL
(Including the effects of the internal standard)

Phase	Greater than 62 dB	Measured in a 30 kHz band excluding a 1 Hz band centered on the fundamental, for dialed frequencies from 80 MHz to 160 MHz. Improvement in signal-to-phase noise is seen for lower frequencies.
Amplitude	Greater than 94 dB	
Synthesizer Residual (Internal noise from 5 MHz input to synthesizer output)		
Phase	Greater than 74 dB	
Amplitude	Greater than 94 dB	

RESIDUAL PHASE NOISE SPECTRAL DENSITY . SSB S/N ratio from 5 MHz input to synthesizer output measured in a 1 Hz bandwidth. Valid for dialed frequencies from 80 MHz to 160 MHz. Improvement for lower selected frequencies.

OFFSET FREQUENCY	TYPICAL S/N
20 Hz	101 dB
200 Hz	111 dB
5 kHz	125 dB
500 kHz	138 dB

OUTPUT VOLTAGE

1 MHz - 160 MHz	Adjustable from +3 dBm to +13 dBm into 50Ω with front panel control or external dc voltage. Level maintained ±1 dB into 50Ω, 25°C ambient
Switching Time	Less than 1 msec for output amplitude to be within ±1dB of final value and phase to be within ±0.1 radian at its new frequency. (< 2 ms with –03 Option installed.)

INTERNAL FREQUENCY STANDARD (Optional) . 5 MHz

Aging Rate	(Option –01) ±1 part in 10^8 per 24 hours (Option –02) ±2 parts in 10^9 per 24 hours

AUXILIARY OUTPUTS . . . . . 5 MHz at nominally 1V rms into 50Ω

AUXILIARY INPUTS . . . . . External 5 MHz frequency standard at 1V rms into 50 ohms. External level control voltage – rms output ≈ dc control voltage.

POWER REQUIREMENTS . . . . . 115/230V rms ±10% selectable by rear panel switch, 50 - 500 Hz, 80 watts.

DIMENSIONS, WEIGHT . . . . . Standard 19" (48.3 cm) relay rack width, 7" (17.8 cm) high, 20" (50.8 cm) behind front panel, 45 pounds (21 Kg). Slides and rack mounting kit optional. (See Fig. 1-1).

ENVIRONMENTAL

Operating	0 to 50°C. 0 to 80% RH. 0 to 10,000 feet.
Non-Operating	–62°C to +70°C. 0 to 50,000 feet

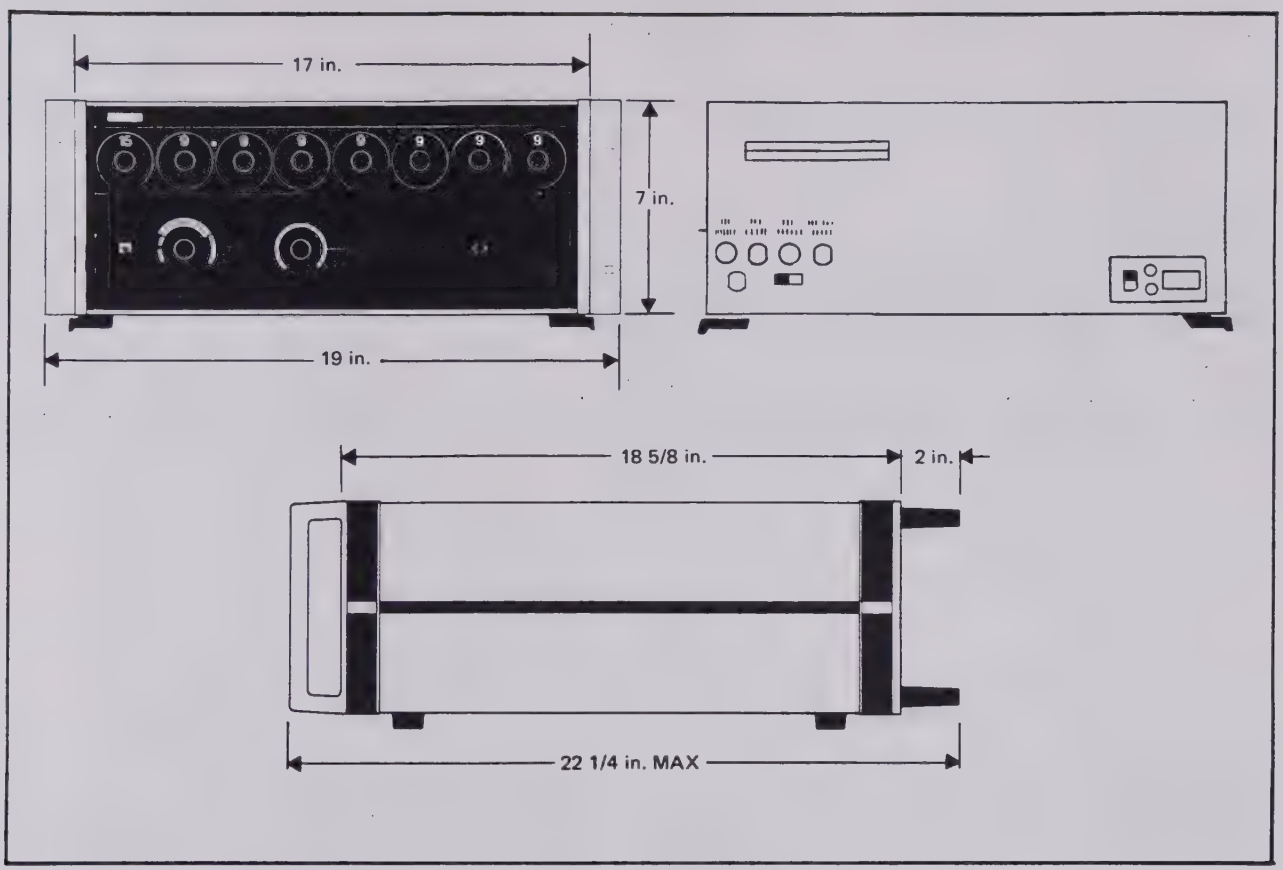

Figure 1-1. OUTLINE DRAWING

Section 2
Operating Instructions

2-1. INTRODUCTION

2-2. This section contains information essential for correct operation of the Model 6160A. Should any difficulties be encountered during operation, please contact the nearest John Fluke Sales Representative or the John Fluke Mfg. Co., Inc. A complete list of Sales Representatives is located in Section 7 of this manual.

2-3. SHIPPING INFORMATION

2-4. The Model 6160A was packaged and shipped in a foam packed cardboard carton. Upon receipt, a thorough inspection should be performed to reveal any damage in transient. Special instructions for inspection and claims are included in the carton.

2-5. If reshipment is necessary, the original container should be used. If it is not available, a new container can be obtained from the John Fluke Mfg. Co., Inc. Please reference the instrument's model number when requesting a new container.

2-6. INPUT POWER

2-7. The synthesizer can be operated from either a 115 or 230V ac, 50 to 500 Hz power line. A slide switch on the rear panel allows selection of the appropriate line voltage. The rated value of the two fuses on the rear panel are as follows:

a. 115V ac – 1½A Slo - Blo

b. 230V ac - ¾A Slo - Blo

2-8. INSTALLATION

2-9. The synthesizer is designed for bench-top use or it can be installed in a standard 19-inch equipment rack with the mounting brackets shown in Figure 2-1 and 2-2. Rack mounting is done as follows:

a. Peel the decals shown in Figure 2-1 from the front corner castings.

b. Remove the screws from the front corner castings which match the hole patterns in the rack mounting brackets.

c. Attach the rack mounting brackets to the corner castings with # 8-32 PHP screws.

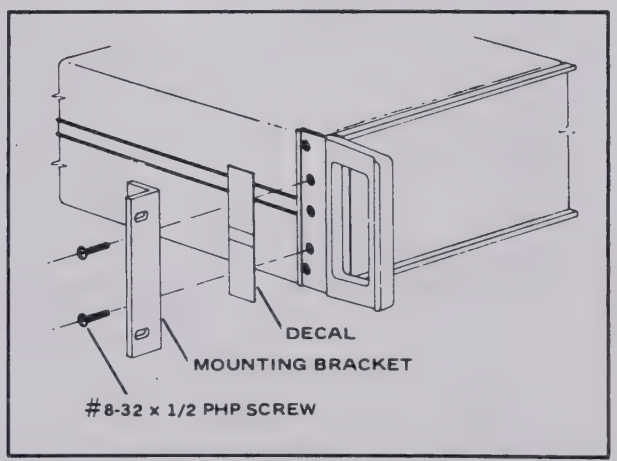

Figure 2-1. RACK MOUNTING BRACKET INSTALLATION (M07-205-600)

d. Peel the center slide panel decals from the synthesizer.

e. Peel the rear corner casting decals from the synthesizer.

f. Remove the six screws from the rear corner castings and remove the castings.

g. Slide the spacer (A) shown in Figure 2-2 into the center section of each side panel until the tapped holes are aligned with the holes in the side panels.

h. Scribe a line on each spacer where it protrudes from the rear of the side panel and then remove the spacers.

i. Cut off the spacers at the scribe mark and then install them in the side panels.

j. Install the rear corner castings.

k. Attach the chassis section (B) to the side panels with the screws (C) provided in the kit.

l. Install the cabinet sections (E) and center sections (D) in equipment rack. The extension angle brackets, which are part of Section (E), are mounted at the rear of the cabinet.

m. Slide the center sections (D) toward the front of the cabinet until they lock in place.

n. Depress the spring locks on the chassis sections (B) and insert the synthesizer between the extended center sections (D) on the cabinet.

o. Slide the synthesizer completely into the equipment rack and secure it in place with fasteners through the rack mounting brackets.

2-10. OPERATING FEATURES

2-11. The location and function of all controls, connectors, and indicators is shown in Figure 2-3.

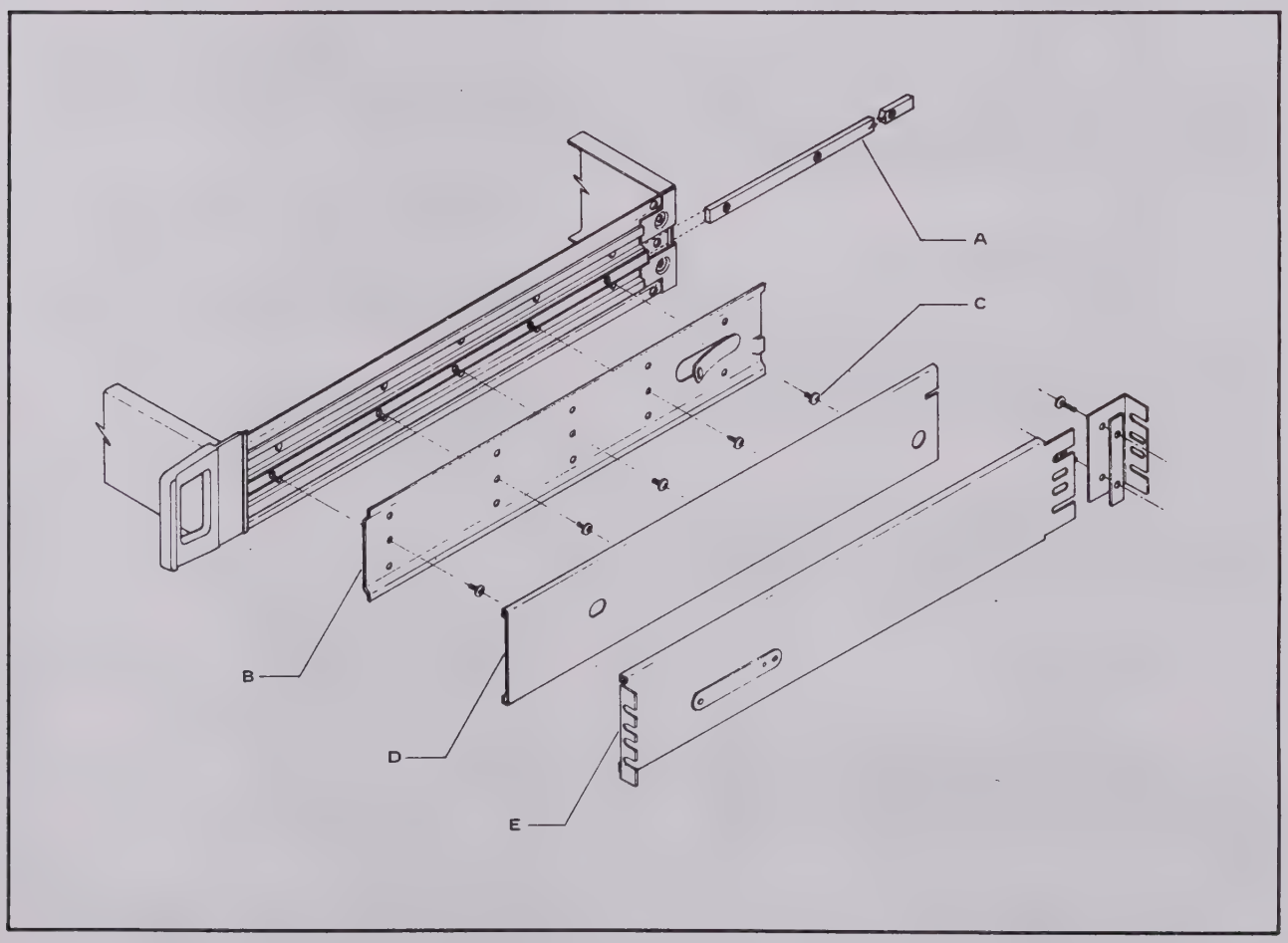

Figure 2-2. CHASSIS SLIDE INSTALLATION (M00-280-610)

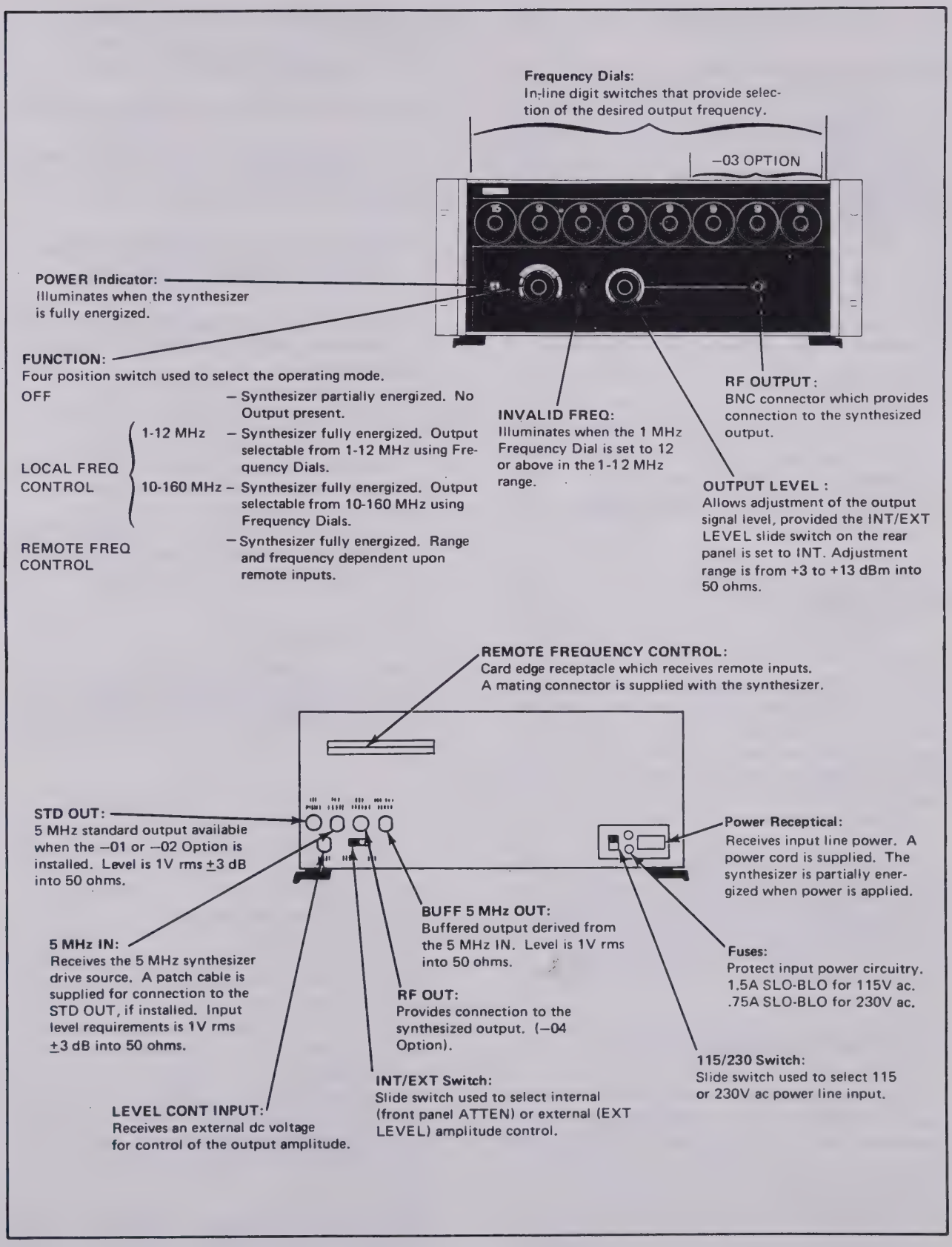

Figure 2-3. OPERATING FEATURES

2-12. OPERATING NOTES

2-13. AC Line Connection

2-14. The input power cord has a three prong, polarized plug. This plug allows connection to either a 115 or 230V ac, 50 to 500 Hz, single phase power line. The round pin on the plug connects the chassis to earth ground; therefore ensure that it is connected to a high quality earth ground.

2-15. The synthesizer is partially energized when the power cord is connected to line power. This is done to provide continuous operating voltages for the Internal Frequency Standard (–01 or –02 Option), when it is installed.

NOTE!

Line power must be applied for at least 72 hours before the specified frequency stability of the Internal Frequency Standard is obtained.

2-16. Drive Source

2-17. A 5 MHz reference signal is required as a drive source. Input signal level requirements is 1V rms ±3 dB into 50 ohms. This signal is applied to the 5 MHz REF IN connector on the rear panel. A buffered 5 MHz signal derived from the drive source is available at the 5 MHz OUT connector.

2-18. When the –01 or –02 Option is installed, a reference drive signal is available at the 5 MHz REF OUT connector. A patch cable is included for connection to the 5 MHz REF IN connector. If an external drive signal is used, care should be exercised in transmitting the signal to the synthesizer to avoid contamination by hum and noise.

2-19. External Amplitude Control

2-20. Provisions have been made to allow the use of an external dc voltage to control the output signal level of the synthesizer. An EXT LEVEL connector on the rear panel receives the dc voltage. Selection of this features is through an INT/EXT LEVEL slide switch also located on the rear panel. Range of the external amplitude control is +3 to +13 dBm. The dc control voltage level is approximately equal to rms level of the rf output. Input resistance of the EXT LEVEL input is > 1k.

2-21. INITIAL OPERATION

2-22. Equipment Connections

2-23. Initial turn-on of the synthesizer is done as follows:

a. Set the 115/230 slide switch to the appropriate power line voltage. Refer to paragraph 2-6 for fuse ratings.

b. Connect the power cord to line power. Refer to paragraph 2-13 grounding information.

c. Apply a 5 MHz drive signal to the 5 MHz REF IN connector. Refer to paragraph 2-16 for input requirements.

d. Set the INT/EXT LEVEL slide switch to INT.

e. Connect a 50 ohm load through a BNC "T" connector to the RF OUTPUT connector.

f. Set the FUNCTION switch to 1 - 12 MHz. The POWER indicator on the front panel should be illuminated.

2-24. Operational Test

2-25. The following test can be used to initially verify operation of the synthesizer. Required test equipment is as follows:

1.	Frequency Counter	1952A-079
2.	RF Voltmeter	HP411A
3.	BNC "T"	
4.	50 ohm resistive load	

a. Perform the steps in paragraph 2-22

b. Set controls on the front panel as follows:

FUNCTION	1 – 12 MHz
OUTPUT LEVEL	fully clockwise
Frequency Dials	1.000 (1.000000 with –03 Option)

c. Connect the rf voltmeter to the BNC "T" at the RF OUTPUT connector. Ensure that this output is terminated in a 50 ohm load.

d. Rotate the OUTPUT LEVEL control throughout its range, observing that the output signal level is adjustable from +3 to +13 dBm.

e. Set the OUTPUT LEVEL control to provide a +13 dBm output.

f. Rotate the Frequency Dials through the frequency band, observing the output level is +13 dBm ±1dB.

g. Set the FUNCTION switch to 10 - 160 MHz, observing the decimal lamp shifts one decade to the right, and repeat step f.

h. Disconnect the rf voltmeter.

i. Connect the frequency counter to the BNC "T" connector at the RF OUTPUT. Gate the frequency counter externally using the 5 MHz signal available at the 5 MHz OUT connector.

j. Rotate each Frequency Dial throughout its range, observing that a corresponding output frequency is present.

k. Set the FUNCTION switch to 1 - 12 MHz and repeat step j.

2-26. If the preceding test conditions were obtained, the synthesizer can be considered fully operational. The test equipment can be disconnected and the synthesized output used as desired.

2-27. OPERATION

2-28. Frequency Selection

2-29. Selection of the desired output frequency is done from the front panel or remotely with programming inputs to the REMOTE connector on the rear panel. A FUNCTION selector on the front panel selects manual or remote mode of operation. Manual operation is in effect when the 1 - 12 MHz or 10 - 160 MHz position is selected. The desired frequency is then selected and indicated using the Frequency Dials. Maximum output frequency is 11.9999 MHz in the 1 - 12 MHz range and 159.999 MHz in the 10 - 160 MHz range. Installation of the Resolution Extender (–03 Option) increases the maximum range outputs to 11.9999999 and 159.999999 MHz. If the most significant decade is dialed to 12 or above in the 1 - 12 MHz range, an incorrect output will be indicated by the INVALID FREQ indicator on the front panel. Remote operation is in effect when the FUNCTION selector is set to REMOTE FREQ CONTROL. Remote operation is described in paragraph 2-34.

2-30. Amplitude Control

2-31. The output signal amplitude is adjustable from +3 dBm to +13 dBm into 50 ohms using a front panel OUTPUT LEVEL control or a dc control voltage applied to the EXT LEVEL connector on the rear panel. An INT/EXT LEVEL slide switch on the rear panel selects the desired control feature. The OUTPUT LEVEL control on the front panel is in effect when the slide switch is set to INT. The external dc control voltage is selected when the slide switch is set to EXT. Input requirements for the external dc control voltage are described in paragraph 2-19.

2-32. Fixed Output

2-33. A fixed 5 MHz output signal is available at the 5 MHz OUT connector on the rear panel. This signal is derived from the reference drive source input. The level is preset to nominally 1V rms into 50 ohms.

2-34. Remote Control

2-35. Control of the output frequency and range is possible through a REMOTE FREQUENCY CONTROL connector on the rear panel. Interface between the programming equipment and the synthesizer is provided through an Amphenol (261-10022-2D1-50001) mating connector supplied with the synthesizer. Figure 2-4 lists and describes each terminal of the connector.

2-37. Remote control is activated by placing the FUNCTION selector on the front panel to REMOTE FREQ CONTROL position. Presence of a Logic "0" at terminal 9 of the rear panel connector selects the 1 - 12 MHz range. A Logic "1" at this terminal selects the 10 - 160 MHz range. BCD inputs at terminals 10 and 13 through 44 then control selection of the output frequency. All decades, with the exception of the MSD, can be programmed to a maximum of 9. The MSD is either 0 or 1.

2-36. Programming input requirements are compatible with DTL or TTL logic using BCD coding. Logic "0" is 0 to +0.9V dc or logic ground. Logic "1" is +2 to +5V dc or open circuit. Logic ground is available at terminals 10 through 12 of the connector.

NOTE!

Logic levels are defined without specifying a maximum digital noise factor of 0.5V. If noise is to be considered, then Logic "0" should be 0 to +0.5V dc or logic ground, and Logic "1" should be +2.5V to +5V dc.

TERMINAL	FUNCTION
1	POWER FLAG: LOGIC "0" = POWER OFF LOGIC "1" = POWER ON
2	SPARE
3	KEY
4	KEY
5	RANGE: LOGIC "0" = 1-12 MHz LOGIC "1" = 10-160 MHz
6	LOGIC GND
7	LOGIC GND
8	LOGIC GND
9	SPARE
11	REMOTE FLAG: LOGIC "0" MANUAL LOGIC "1" = REMOTE
12	SPARE
	BIT DECADE (RANGE)
10	1 100 MHz (10-160 MHz) 10 MHz (1-12 MHz)
14	1
13	2 1 MHz (1-12 MHz)
16	4 10 MHz (10-160 MHz)
15	8
18	1
17	2 100 kHz (1-12 MHz)
20	4 1 MHz (10-160 MHz)
19	8
22	1
21	2 10 kHz (1-12 MHz)
24	4 100 kHz (10-160 MHz)
23	8
26	1
25	2 1 kHz (1-12 MHz)
28	4 10 kHz (10-160 MHz)
27	8
30	1
29	2 100 Hz (1-12 MHz)
32	4 1 kHz (10-160 MHz)
31	8
34	1
33	2 10 Hz (1-12 MHz)
36	4 100 Hz (10-160 MHz)
35	8
38	1
37	2 1 Hz (1-12 MHz)
40	4 10 Hz (10-160 MHz)
39	8
42	1
41	2 0.1 Hz (1-12 MHz)
44	4 1 Hz (10-160 MHz)
43	8

RESOLUTION EXTENDER (–03 OPTION)

REMOTE FREQUENCY CONTROL

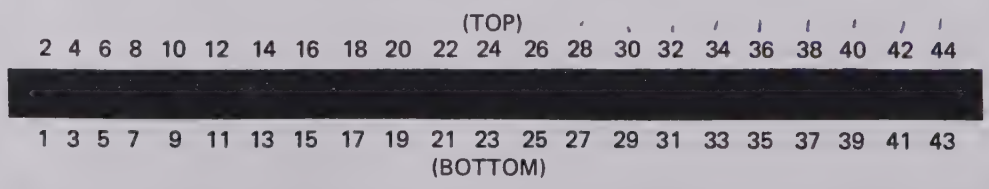

Figure 2-4. REMOTE FREQUENCY CONTROL CONNECTOR TERMINALS

Section 3
Theory of Operation

3-1. INTRODUCTION

3-2. This section contains the theory of operation for the Model 6160A. The information is arranged under headings of "BLOCK DIAGRAM ANALYSIS and CIRCUIT DESCRIPTIONS". Simplified block diagrams and circuits are included with the text information. A complete functional block diagram and schematics are located in Section 8, Schematic Diagrams.

3-3. BLOCK DIAGRAM ANALYSIS

3-4. Introduction

3-5. The following paragraphs describe the basic circuit functions of the Model 6160A. The circuitry is first discussed using the block diagram shown in Figure 3-1. Next, the circuitry is discussed in greater detail using the block diagram (Drawing No. 6160A-1501) located at the rear of the manual and simplified diagrams shown in Figure 3-2 through 3-4.

3-6. Simplified Block Diagram

3-7. The Model 6160A receives a 5 MHz reference input and produces a 1 to 160 MHz output signal. Six major circuits plus an optional Resolution Extender are used to produce the output. These circuits and their interconnection are shown in Figure 3-1.

3-8. The 5 MHz reference input is processed by the Input Filter to provide two 5 MHz signals and a 10 MHz signal. One of the 5 MHz signals is made available as a fixed output. The other 5 MHz signal and the 10 MHz signal function as reference inputs to the 1 MHz and 10 MHz Digit Sections. A 1 MHz reference for the 1 to 100 kHz Digit Unit is obtained through a 5/1 Divider in the 1 MHz Digit Section. This 1 MHz signal also functions as a reference input to the optional Resolution Extender and as the CLOCK signal for the Frequency Control Computer.

3-9. Each Digit Section, including the Resolution Extender, receives digital internal frequency control commands from the frequency Control Computer. These commands, however, may or may not be equal to the preselected output of the synthesizer. Actual command data is dependent

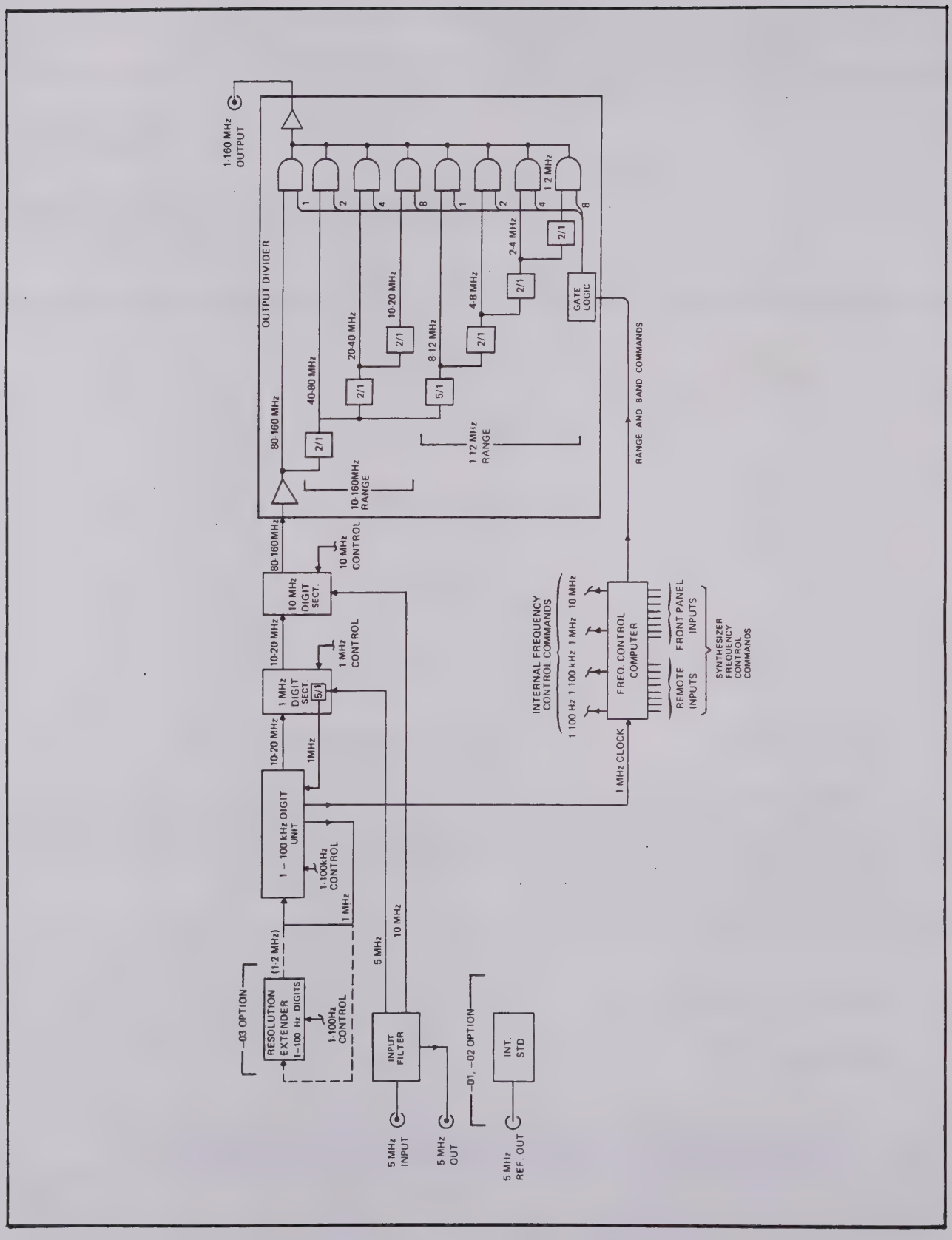

Figure 3-1. MODEL 6160A SIMPLIFIED BLOCK DIAGRAM

upon the division factor used in the Output Divider to achieve the preselected output. Whatever the condition, however, the Resolution Extender will produce a 1 - 2 MHz signal and the 1 - 100 kHz Digit Unit and the 1 MHz Digit Section will produce 10 - 20 MHz signals. The output from the 10 MHz Digit Section is an 80 to 160 MHz signal which contains the entire decade information required to yield the preselected output.

3-10. The Output Divider receives the 80 to 160 MHz output of the 10 MHz Digit. Dividers in this section then divide the 80 to 160 MHz input as necessary to yield the preselected output frequency. Should the preselected output be in the 80 to 160 MHz range, only buffering of the 10 MHz Digit Section output is necessary.

3-11. In order to better understand the synthesizing process, assume for example that an output frequency of 13.043209 MHz is selected. This preselected frequency command is first processed in the Frequency Control Computer, which then produces internal frequency control commands throughout the synthesizer. Since this preselected output is within the 10 to 20 MHz band, the output of the third 2/1 divider in the Output Divider is selected to yield the final output frequency. Under this condition, the output of the 10 MHz Digit Section is undergoing a division factor of eight. Its output frequency is 8 x 13.043209 MHz or 104.345672 MHz. The Frequency Control Computer is therefore producing corresponding 104.345672 MHz control commands to the Resolution Extender, 1 - 100 kHz Digit Unit, 1 MHz Digit Section, and 10 MHz Digit Section. The Output Divider receives range and band commands dependent upon the preselected output.

3-12. The 672 Hz commands to the Resolution Extender sets its output to 1.672 MHz. This signal is applied to the 1 - 100 kHz Digit Unit. The incoming 1.672 MHz signal to the 1 - 100 kHz Digit Unit and the "345" BCD Commands applied to it produce a 13.45672 MHz signal at its output. This signal is applied to the 1 MHz Digit Section, which, with the presence of a "4" BCD command, produces a 14.345672 MHz output. The resulting signal is then applied to the 10 MHz Digit Section, which along with the command applied to it, produces a 104.345672 MHz output. This resultant, as previously described, is then divided by eight in the Output Divider to yield the 13.043209 MHz output.

3-13. Functional Block Diagram

3-14. The following paragraphs describe the operation of the synthesizer using the System Block Diagram (Drawing No. 6160A-1501) located at the rear of the manual. The Input Filter is discussed first. Next, the Frequency Control Computer is discussed to describe generation of the internal frequency control commands. The Resolution Extender, 1 - 100 kHz Digit Unit, 1 MHz and 10 MHz Digit Sections, Output Divider, and Power Supply are then discussed to fully describe overall operation of the synthesizer.

3-15. INPUT FILTER. The Input Filter (6160A-4101) conditions the 5 MHz input to the synthesizer and redistributes it as well as a 10 MHz signal to other parts of the synthesizer. The 5 MHz input is derived from an external frequency standard or the internal 5 MHz Frequency Standard (6160A-4018), which is installed as the –01 or –02 Option. This signal is buffered, filtered, and amplified to provide two 5 MHz signals. It is also multiplied in a x2 multiplier to provide a 10 MHz signal. One of the 5 MHz signals is preset to a level of 1V rms into 50 ohms and made available at the BUFF 5 MHz OUT connector. The other 5 MHz signal is applied to the 1 MHz D.U. Step Loop (6160A-4103). The 10 MHz signal is applied to the 10 MHz D.U. Step Loop Phase Detector (6160A-4106) where it functions as a reference for the 10 MHz digit step loop.

3-16. The 5 MHz signal to the 1 MHz D.U. Step Loop module is divided down to 1 MHz by a 5/1 Divider. This signal then functions as the reference for the 1 MHz digit step loop. It is also applied to the 1 - 100 kHz Digit Unit (6160A-4002) where it is buffered to provide three separate 1 MHz signals. Two of the signals function as individual references for the 1 through 100 kHz digits and optional Resolution Extender (6160A-4017). The other 1 MHz signal functions as a CLOCK for the Computer (6160A-4012).

3-17. FREQUENCY CONTROL COMPUTER. The frequency control Computer (6160A-4012) generates internal frequency control commands from manual or remote synthesizer frequency control inputs. Manual inputs are from the front panel frequency controls. Remote inputs are from the REMOTE FREQUENCY CONTROL connector on the rear panel. These inputs are multiplexed serial by decade, processed, and then converted to parallel digital commands that establish correct synthesis conditions necessary to obtain the preselected output. A simplified diagram of the Computer is shown in Figure 3-2. A formula given

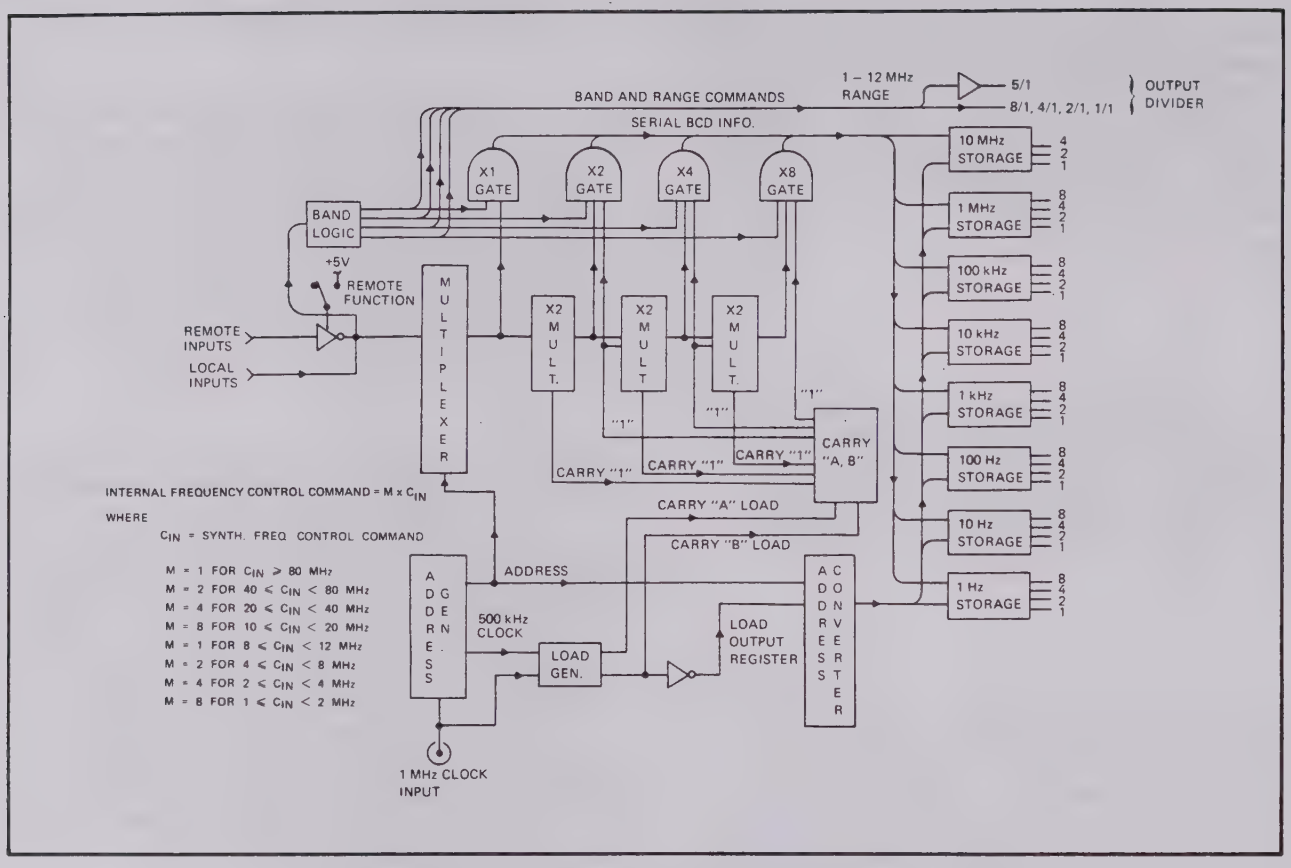

Figure 3-2. FREQUENCY CONTROL COMPUTER

in this illustration can be used to determine what digital output commands are generated for any preselected input.

3-18. Input commands from the front panel or rear panel are applied to the multiplexers. The band logic decodes input 10 MHz digit information and selects the appropriate x1, x2, x4, or x8 gates. Range commands (1 - 12 MHz or 10 - 160 MHz) and decoded 10 MHz digit commands (M = 8-4-2-1) are also applied to the Output Divider to select dividers and gates in that module.

3-19. A 1 MHz clock input controls the parallel to serial to parallel conversion process. This input signal is applied to the load generator and divided by two to drive the address generator. The address generator produces binary address data to the multiplexer and address converter. The multiplexers serially transfer the parallel synthesizer frequency control BCD inputs in 1 Hz to 10 MHz decade order to the first x2 multiplier and the x1 gates. The output of the first x2 multiplier is applied to the following x2 multiplier as well as the x2 gates. The output of the second x2 multiplier is applied to the x4 gates as well as the final x2 multiplier, which produces the x8 output. Carry outputs are sequentially applied to the following multiplier by the carry "A" and "B" storage circuits. Carry load commands are derived from the load generator. The multiplied and gated serial by decade BCD information is then applied to the 1 Hz through 10 MHz storage circuits. Conversion of the serial information to parallel format is done in the storage circuits. These circuits are addressed in sequence with each decade transfer period by control commands from the address converter.

3-20. RESOLUTION EXTENDER. The Resolution Extender (6160A-4017) is installed as the –03 Option. It provides .1, 1, and 10 Hz frequency increments in the 1 - 12 MHz range and 1, 10 and 100 Hz frequency increments in the 10 - 160 MHz range. It receives a 1 MHz reference input and produces a 1 to 1.999 MHz output dependent upon the 1 Hz to 100 Hz decade internal frequency control commands. The circuitry consists of a 100/1 reference divider, an output 10/1 divider, and a phase-locked loop formed by a voltage controlled multivibrator (VCM), N/1 divider and phase detector.

3-21. The 1 MHz reference input is divided down to 10 kHz by the 100/1 divider. This 10 kHz signal is applied to a phase detector where it functions as the reference for the phase-locked loop. The other input to the phase detector

is from an N/1 divider whose division factor is dependent upon the 1 Hz through 100 Hz decade internal frequency control commands (Ca). The division integer N ranges from 1000 to 1999 corresponding to the 000 through 999 Hz decade commands. Output of the phase detector is a dc control voltage which determines the frequency of the VCM. Frequency range of the VCM is 10 to 20 MHz. The resulting VCM signal is applied to the N/1 divider where it is divided down and compared to the reference signal in such a manner as to produce a 10.00 to 19.99 MHz signal corresponding to the 1 through 100 Hz decade internal frequency control commands. The resulting VCM signal is then divided by 10 to produce an output frequency ranging from 1.000 to 1.999 MHz. This signal is applied to the 1 - 100 kHz Digit Unit. For example, if an "672" command is supplied, the VCM will run at 16.72 MHz and yield a 1.672 MHz output.

3-22. 1 - 100 kHz DIGIT UNIT. The 1 - 100 kHz Digit Unit (6160A-4002) produces .1, 1, and 10 kHz frequency increments in the 1 - 12 MHz range and 1, 10, and 100 kHz increments in the 10 - 160 MHz range. It consists of a 1 kHz digit unit, a 10 kHz digit unit, and a 100 kHz digit unit. Since the operation of the three digit units are almost identical, only the 1 kHz digit unit will be described. Each unit contains both a step and main phase-locked loop.

3-23. The step loop shown in Figure 3-3 produces a 9 to 18 MHz signal in 1 MHz increments. Control of the VCO frequency is done using an N/1 divider and phase detector. The N/1 divider receives the VCO output and provides one input to the phase detector. Division factor of the divider (N) ranges from 9 to 18 and corresponds to the 1 kHz decade internal frequency control commands (Cb) of 0 to 9 (see table in Figure 3-3). The phase detector compares the divider output to a 1 MHz reference input and produces a dc control voltage for the VCO. This voltage increases or decreases the VCO frequency until it matches the division factor of the N/1 divider and both inputs to the phase detector are 1 MHz.

3-24. The main loop shown in Figure 3-3 combines the step loop signal and the previous decade information to produce a 1 to 1.9999 MHz output. This signal is produced using a digital to analog converter (D/A), voltage controlled oscillator (VCO), subtractive mixer, low-pass filter (LPF), and a phase detector. The D/A circuitry receives the internal frequency control command for that decade and produces a dc voltage which presteers the VCO near the desired frequency. Overall range of the VCO is from 10 to 20 MHz. The VCO output is applied to a subtractive mixer and the 10/1 divider. The step loop signal of 9 to 18 MHz functions as the other input to the subtractive mixer. Since the main loop frequency ranges from 1 to 2 MHz above the step loop frequency, the resulting output frequency of the subtractive mixer will be approximately 1-2 MHz (see table in Figure 3-3). This signal is filtered in the LPF and applied to the phase detector. The phase detector then compares the subtractive mixer output and the preceding digit information (1 MHz in the case of the 1 kHz digit unit with no resolution extender installed) and phase-locks the main loop making both inputs to the phase detector equal. The resulting 10 to 20 MHz output is then divided down in the 10/1 divider to yield the nominal 1 to 2 MHz output. This signal is applied to the 10 kHz digit section which operates in the same man-

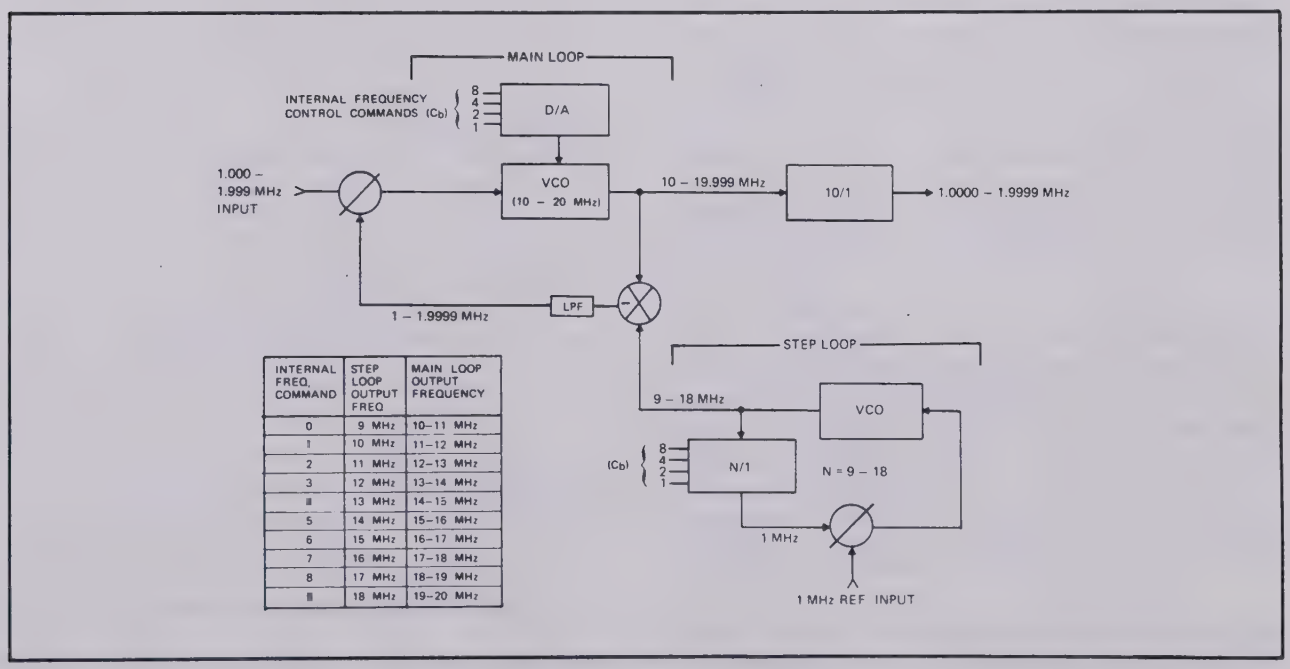

INTERNAL FREQ. COMMAND	STEP LOOP OUTPUT FREQ	MAIN LOOP OUTPUT FREQUENCY
0	9 MHz	10–11 MHz
1	10 MHz	11–12 MHz
2	11 MHz	12–13 MHz
3	12 MHz	13–14 MHz
4	13 MHz	14–15 MHz
5	14 MHz	15–16 MHz
6	15 MHz	16–17 MHz
7	16 MHz	17–18 MHz
8	17 MHz	18–19 MHz
9	18 MHz	19–20 MHz

Figure 3-3. 1 kHz DIGIT UNIT

ner. Its output drives the 100 kHz digit section, thus producing the 10 to 19.99999 MHz output of the 1 - 100 kHz Digit Unit module.

NOTE

Each VCO having a range of 9 to 18 MHz or 10 to 20 MHz actually operate from 18 to 36 MHz and 20 to 40 MHz, respectively. Each VCO also contains a 2/1 divider which produces the 9 to 18 MHz or 10 to 20 MHz output.

3-25. 1 MHz DIGIT SECTION. The 1 MHz Digit Section consists of three separate modules which together form phase-locked loops nearly identical to the 1 kHz loops in the 1 - 100 kHz Digit Unit. These modules utilize the 1MHz command information and the output of the 1 - 100 kHz Digit Unit to provide 100 kHz and lower frequency increments in the 1 - 12 MHz range and 1 MHz and lower increments in the 10 - 160 MHz range. Operation of this section is almost identical to the 1 kHz Digit Unit previously described; therefore, only the difference will be noted. The 1 MHz Digit Section consists of three modules: the 1 MHz D.U. Step Loop (6160A-4103): the 1 MHz Mixer (6160A-4104): and the 1 MHz DU Main Loop (6160A-4105). Other differences between the 1 kHz digit unit and the 1 MHz digit unit section are in the prescaling by 10 of the lower order digit (6160A-4002 output signal) carry in frequency and the absence of the 10/1 output divider as is the case in the 100 kHz digit unit.

3-26. 10 MHz DIGIT SECTION. The 10 MHz Digit Section consists of five separate modules which together form the step and main loops shown in Figure 3-4. The output ranges from 80 to 159.999999 MHz. The step loop consists of modules titled 10 MHz Step Loop Phase Detector (6160A-4106) and 10 MHz D.U. Step Loop VCO (6160A-4107). The main loop consists of the 10 MHz D.U. IF Mixer (6160A-4108), 10 MHz D.U. Phase Detector (6160A-4109), and 10 MHz D.U. Main VCO (6160A-4110).

3-27. The 10 MHz step loop modules produce a 70 to 140 MHz output in 10 MHz increments (see table in Figure 3-4). The circuitry associated with the 10 MHz step loop consists of a D/A converter, VCO, and a phase detector. The D/A converter receives the 10 MHz decade internal frequency control commands and produces a dc control voltage which presteers the VCO near the desired frequency. The resulting VCO signal is then phase locked to a 10 MHz reference using a phase detector.

3-28. The 10 MHz main loop combines the 10 MHz step loop signal and the previous decade information to produce an 80 to 159.999999 MHz output. This signal is produced using a D/A converter and VCO in the 10 MHz D.U. Main VCO module, a subtractive mixer and LPF in the 10 MHz D.U. IF Mixer module, and a phase detector in the 10 MHz D.U. Phase Detector module.

3-29. The D/A converter receives the 10 MHz decade internal frequency control commands and produces a dc control voltage which presteers the VCO to near the desired frequency. Nominal overall range of the VCO is from 80 to 160 MHz in 10 MHz range increments. The VCO output is applied to a subtractive mixer and the Output Divider mod-

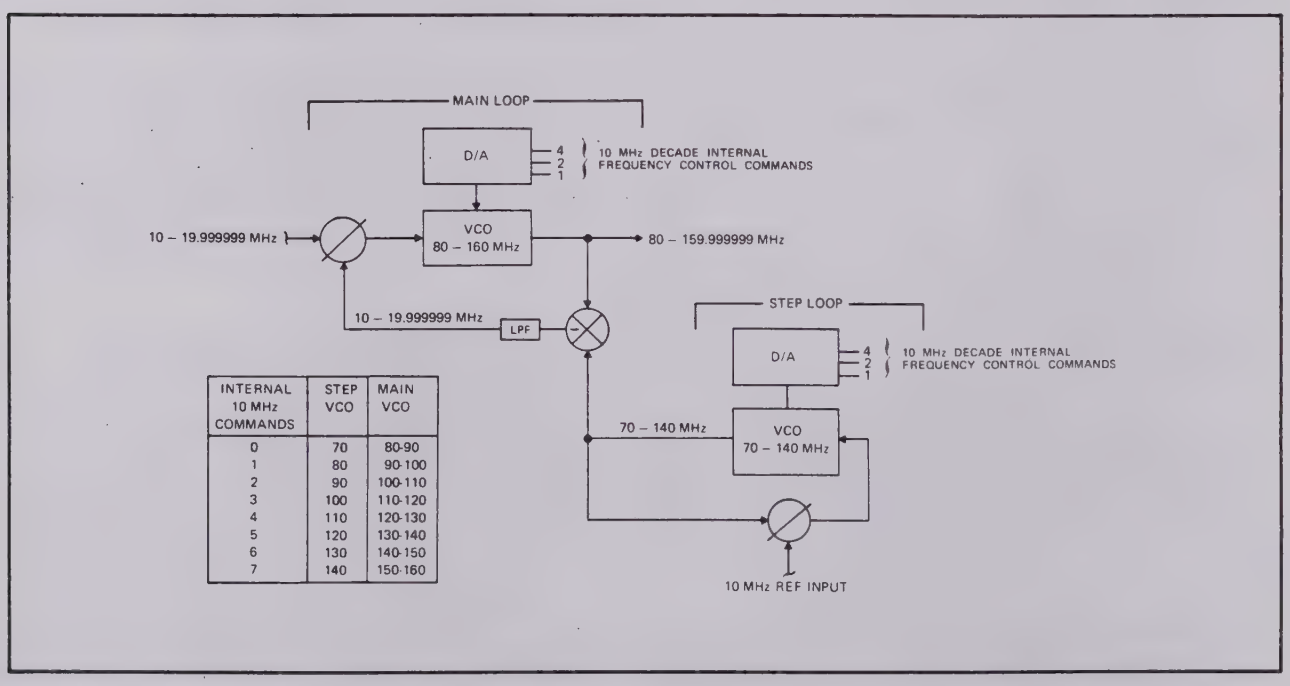

INTERNAL 10 MHz COMMANDS	STEP VCO	MAIN VCO
0	70	80-90
1	80	90-100
2	90	100-110
3	100	110-120
4	110	120-130
5	120	130-140
6	130	140-150
7	140	150-160

Figure 3-4. 10 MHz DIGIT SECTION

ule. The 10 MHz step loop signal of 70 to 140 MHz functions as the other input to the subtractive mixer. Since the main loop signal is 10 to 20 MHz above the step loop signal, the output of the mixer will be approximately 10 - 20 MHz. The resulting output of the mixer is filtered in the LPF and applied to the phase detector. The phase detector compares the mixer output to the output of the 1 MHz Digit Unit Section and supplies a dc control voltage to the main loop VCO that phase locks the main loop such that both inputs to the phase detector are equal in frequency. The resulting 80 to 159.999999 MHz output from the VCO thus contains the entire digit information.

3-30. OUTPUT DIVIDER. The Output Divider (6160A-4111) receives the synthesized frequency of 80 to 159.999999 MHz and produces the final 1 to 159.999999 MHz output. The circuitry consists of an input buffer, six 2/1 dividers, a 5/1 divider, low-pass filters, gates and an output amplifier.

3-31. The 80 to 159.999999 MHz signal is amplified in the input buffer and applied to a gate, low-pass filter, and a 2/1 divider. The 2/1 divider and each successive divider then provides divided down signals to associated low-pass filters. Activation of the appropriate gate by the range and band commands from the frequency control computer then applies the desired low-pass filter output to the output amplifier. This synthesized signal corresponds to the pre-selected output. For example, if a 13.111111 MHz output is selected, the 10 - 160 MHz range and 10 - 20 MHz band commands activates the gates for the 20 MHz low-pass filter. Since the synthesized input to the Output Divider would be 104.888888 MHz, it is divided by three 2/1 dividers to obtain the preselected 13.111111 MHz output. The output amplifier then produces a +3 to +13 dBm output signal depending upon the position of the OUTPUT LEVEL control or the level of an external dc amplitude control voltage.

3-32. POWER SUPPLY. The Power Supply (6160A-4014) produces dc operating voltages of +5, +14, and −12V. It receives ac power through the Mother Board (6160A-4013) from the Power Transformer (6160A-4116). A dual winding in the primary of the power transformer allows operation from either a 115 or 230V ac line. The three operating voltages are regulated by individual series-pass regulators. The series-pass transistors are mounted on the Heat Sink (6160A-4021) located on the rear panel.

3-33. CIRCUIT DESCRIPTIONS

3-34. The following paragraphs describe in detail the circuitry in the synthesizer. Associated schematic diagrams are located at the rear of the manual.

3-35. Front Panel Controls (6160A-4051)

3-36. The Front Panel Controls assembly (Drawing No. 6160A-1051) provides the means to energize the synthesizer and convert manual frequency commands to BCD information that is processed by the Computer Assembly (6160A-4012). It also provides visual indication of operatiing conditions through light emitting diodes (LED's) labeled POWER and INVALID FREQ. Frequency Dials provide in-line decimal indication of the manually selected frequency. A FUNCTION switch allows selection of one-of-two frequency ranges (1 - 12 MHz and 10 - 160 MHz) and the remote mode of operation. Decimal indicators (LED's) are illuminated in the appropriate range such that the manually selected frequency is displayed in MHz. An OUTPUT LEVEL controls allows setting of the RF OUTPUT level anywhere between +3 and +13 dBm.

3-37. Energizing of the synthesizer is done using the FUNCTION switch S9. When S9 is set to a position other than OFF, a ground, via S9C, is applied to terminals 14 and 21 of J1. These grounds enable the Power Supply (Drawing No. 6160A-1014) via the Computer and Mother Board (Drawing Nos. 6160A-1012 and 1013), which then produces +5V, +14V, and −12V operating voltages. Presence of the +5V operating voltage at terminals 32 and 34 of J2 illuminates POWER indicator CR4 via R10. This +5V also illuminates decimal indicator CR1 or CR2 via S9A when it is set to the corresponding 10 - 160 MHz or 1 - 12 MHz position. When the FUNCTION switch is set to OFF, a ground is made available, via S9C, to terminal 13 of J1 which enables the internal Frequency Standard (−01 or −02 Option).

3-38. Selection of the 1 - 12 MHz or 10 - 160 MHz range provides a ground, via S9B, to the rotors of Frequency Dials S1 through S8. These switches produce BCD commands (0V = true) to J1 and J2 which are processed by the Computer assembly to establish the manually selected output frequency. Diodes CR2 through CR33 provide isolation when the REMOTE mode is selected. Selection of the REMOTE mode opens the ground to the rotors of S1 through S8, via S9B, and also opens the ground to terminal 21 of J2. Subsequently, the Frequency Dials are disabled in the REMOTE mode. Absence of the ground at terminal 21 of J2 and presence of +5V at terminals 31 and 33, via S9A, then causes the Computer assembly to process only inputs from the remote input connector at the rear panel.

3-39. The INVALID FREQ. indicator CR3 is illuminated whenever the 1 - 12 MHz range is selected and the 10 MHz Frequency Dial is set to 12 and above. NOR/GATE U1 receives the 8 and 4 bit commands from S8 at its pins 1 and 2 and ground via S9B when the 1 - 12 MHz range is selected. Presence of all three grounds produces a 0V output at pins 6 and 8 of U1.This 0V output provides a return to ground for CR3 via R1 and R2 and illuminates the INVALID FREQ indicator.

3-40. Control of the output signal level is done using the RF LEVEL control R7. Variable resistor R7 together with R3, R4, R6, and R8 form a divider between ground and

+5V. The wiper voltage of R7 is made available to P1 and the Output Divider module (6160A-4111) via an INT/EXT slide switch on the rear panel. Variable resistors R4 and R6 allow adjustment of the upper and lower voltage limits of R7.

3-41. Power Supply (6160A-4014)

3-42. The Power Supply (Drawing No. 6160A-1014) consists of three low-ripple supplies which provide operating voltages of +5V, +14V, and −12V for the synthesizer. A block diagram of the circuitry is shown in Figure 3-5.

3-43. Input power transformer T1 receives ac line power through the RFI filter, fuses F1 and F2, and slide switch S1. The primary windings of T1 are connected in parallel via S1 for 115V line operation or in series for 230V line operation. Three separate secondary windings of T1 supply full-wave rectifiers CR1 through CR6 and C1 through C3 with required ac operating voltages. The resulting rectified dc voltages are applied to P1 and P2 of the power supply. The dc voltage at pin L of P1 (+24V) is applied to the +14V regulator. It also functions as an unregulated supply voltage for the optional Frequency Standard (6160A-4018). The dc voltage at pin 4 of P2 (−24V) is applied to the −12V regulator. The dc voltage at pins 9 and 10 of P2 (+10V) is applied to the +5V regulator.

3-44. The +14V supply consisting of Q1 through Q5, U1, and series pass elements mounted on the heat sink produces a low-ripple +14V dc operating voltage for the synthesizer. It also contains a current limiter which prevents overloads from harming the supply. The regulator is enabled by a ground applied to R8 via the FUNCTION switch on the front panel. It consists of constant current source Q5, comparator amplifier U1, and series pass elements Q1 and Q2. Constant current source Q5 provides operating current for the series pass elements Q1 and Q2 and the comparator amplifier U1. One input to U1 is referenced to supply common via R15. The other input to U1 is derived from divider R17 through R21 connected between the +14V and −12V outputs. Subsequently, the +14V regulator is referenced to the −12V regulator. Any variations in the +14V output are sensed at the junction of R18 and R19 by U1, amplified, and used to alter the conduction of the series pass transistors Q1 and Q2 to maintain the +14V output. Variable resistor R21 allows adjustment of the +14V output. Drive voltage input to Q2 is prevented from exceeding +18V by CR10 in the event U1 and associated circuitry fails.

3-45. Current overloads are prevented from harming the +14V regulator by Q1 through Q4. Transistor Q1 together with temperature compensator Q2 monitor the voltage drop across R4. When the current through R1 exceeds approximately 1.2A, current through Q1 and resistors R1, R2 in its collector produces a turn-on voltage for Q4. Conduction of Q4 prevents any further increase in base current for series pass driver Q2. The resulting current via series pass element Q1 is subsequently limited at 1.2A. If the regulator output falls below +14V during a current limit condition, transistor Q3 conducts and further decreases drive current to series pass driver Q2, thus providing "fold-back" current limiting of the regulator output. An example of "fold-back" limiting is shown in Figure 3-6.

3-46. The −12V supply produces a low-ripple −12V dc operating voltage. The supply is enabled by a ground applied to R29 via the FUNCTION switch on the front panel. The regulator consists of Q10, U2, CR21, and series pass elements Q3 and Q4. Current limit protection is provided by Q6 through Q9. Operation of this circuitry is very similar to the +14V regulator. Differences are the use of zener CR21 as a reference for U2 and a current limiting point of approximately 1.1A. Variable resistor R40 allows adjustment of the −12V output.

3-47. The +5V supply consists of Q11 through Q15, U3, and series pass elements Q5 and Q6. It produces a low-ripple

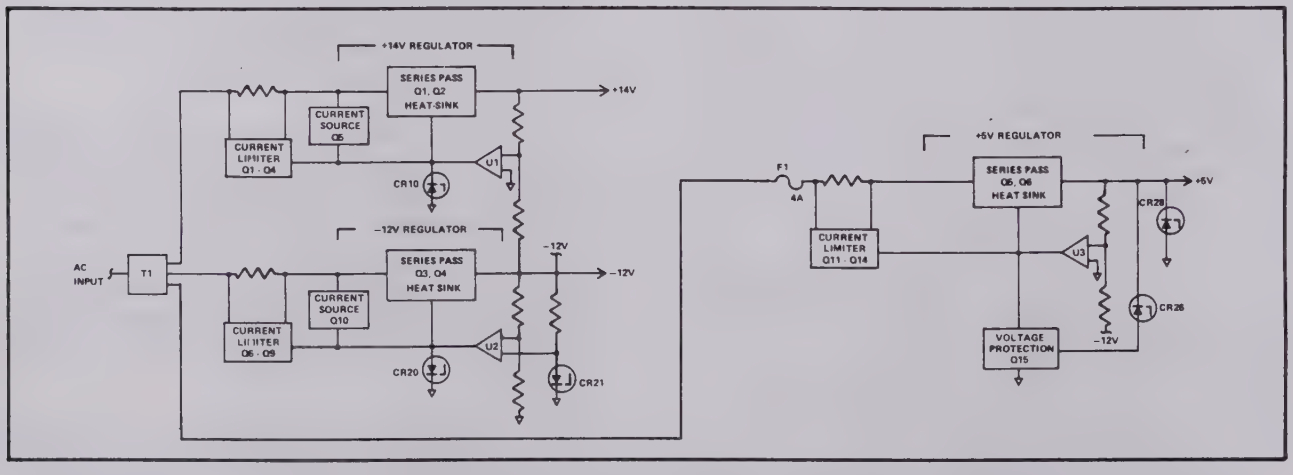

Figure 3-5. POWER SUPPLY FUNCTIONAL BLOCK DIAGRAM

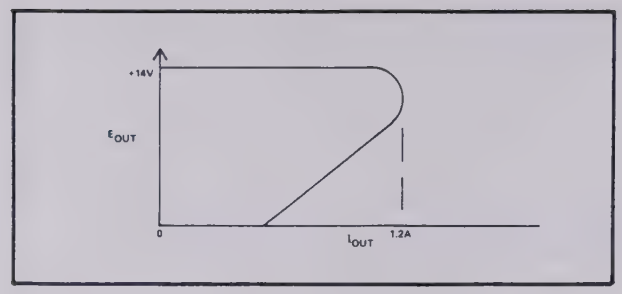

Figure 3-6. "FOLD-BACK" CURRENT LIMITING

+5V dc operating voltage. The regulator consists of Q15, U3, and series pass elements Q5 and Q6. Current limit protection is provided by Q11 through Q14. The regulator is referenced to the –12V supply via divider R58 through R61. Enabling is done in sequence with the –12V supply. Operation is very similar to the +14V supply. Differences are a current limit point of approximately 3.5A and over voltage protection provided by CR26, Q15 and CR28. Fuse F1 provides additional protection at 4A.

3-48. 5 MHz Frequency Standard (6160A-4018)

3-49. The 5 MHz Frequency Standard (Drawing No. 6160A-1018) is installed as the –01 or –02 Option. It provides a 5 MHz reference drive source for the synthesizer via a STD OUT connector on the rear panel.

3-50. The frequency standard receives operating voltage from the Mother Board (Drawing No. 6160A-1013) whenever ac power is applied to the synthesizer. When the FUNCTION switch is set to OFF, a ground is applied to pin 8 of the frequency standard. This ground causes Q1 to conduct and apply the unregulated +14V input at pins H and 7 to terminal 3 of oscillator, Y1. Since the power supply is not operating, the regulated inputs to pins 1 and 6 are not present and terminal 1 of Y1 is at ground via CR2. The unregulated input between terminals 3 and 1 of Y1 then serve as an operating voltage for the oscillator. When the FUNCTION switch is set to a position other than OFF, the ground to pin 8 is removed. Since the power supply is now operating regulated inputs of +14V and –12V are applied to pins 6 and 1, respectively. Removal of the ground at pin 8 causes Q1 to cut-off, thus making the applied regulated inputs between terminals 3 and 1 (+26V) of Y1 serve as an operating voltage for the oscillator. Diode CR2 is cut-off because of the –12V input to pin 1. Decoupling of the –12V and +14V inputs is provided via L1, C1 and L2, C2, respectively.

3-51. Input Filter Module (6160A-4101)

3-52. The Input Filter Module (Drawing No. 6160A-1001) processes the 5 MHz synthesizer drive input and produces two 5 MHz outputs and a 10 MHz output. One of the 5 MHz signals is made available at the rear panel. The other 5 MHz signal and the 10 MHz signal function as internal references within the synthesizer. A block diagram of the circuitry is shown in Figure 3-7.

3-53. The 5 MHz drive input applied to J1 is first processed by the tuned limiter amplifier Q1 and Q2. This circuit functions as a limiter for high level inputs and as an amplifier for low-level inputs. Input signal level requirement is nominally 1V rms ±3 dB. The resulting signal at L2 is then filtered by Y1, amplified by driver Q3, and further filtered by Y2. The filtered 5 MHz signal is amplified by Q4 to provide a 1V rms into 50 ohm output at J3. Variable resistor R17 allows adjustment of the signal level at J3. Driver Q7 and NAND gate U1 provide a 5 MHz TTL signal at J2. A 10 MHz signal is provided at J4 by the tuned push-pull amplifier consisting of T3, Q5, Q6 and L4.

3-54. Resolution Extender Assembly (6160A-4017)

3-55. The Resolution Extender (Drawing No. 6160A-1017) is installed as the –03 Option. It receives a 1 MHz reference input and BCD 1, 10 and 100 Hz decade commands. The resulting output is a 1.000 to 1.999 MHz signal proportional to the 1 Hz through 100 Hz decade commands. A block diagram of the circuitry is shown in Figure 3-8.

3-56. The 1 MHz input at J2 is divided down to yield a 10 kHz signal using two cascaded 10/1 dividers, U12 and U13. The resulting 10 kHz signal is applied to pin 3 of phase detector U10 where it functions as a reference. Integrated circuit U10 compares the output of the N/1 divider applied to its pin 1 against the reference input and produces negative pulses at pins 2 or 13 if any difference in frequency exists. If the N/1 divider output frequency is lower than the reference, pulses are present at pin 2 of U10. Negative pulses are present at pin 13 of U10 when the N/1 divider output frequency is higher than the reference.

3-57. Amplifier U14 inverts the output from pin 2 of U10 and the resulting positive pulses turn on CR3, CR4, and Q1. Conduction of Q1 produces an up frequency charge current for C20 via R9. Down frequency charge current for C20 is provided by Q5 which receives negative pulses from pin 13 of U10 via CR5, R6, and CR6. Conduction of Q5, however, occurs only when a frequency change is made, because of the controlled bleed-off for C20 provided by Q6. Transistors Q8 and Q9 increase charge current to C20 when the 100 Hz decade has an 8 bit present, thus increasing overall loop response. Presence of the 8 bit produces a 0V input to the base of Q8 via U2. This condition turns off Q8 and Q9 and allows CR8 and CR9 to conduct if a negative pulse is provided from pin 2 or 13 of U10. Conduction of CR8 places R34 and R10 in parallel and increases charge current available through Q5. Increased charge current through Q1 is provided by conduction of CR9, which places R33 in parallel with R8. Absence of an 8 bit in the 100 Hz decade produces a +5V output from U2 which turns Q8 and Q9 on.

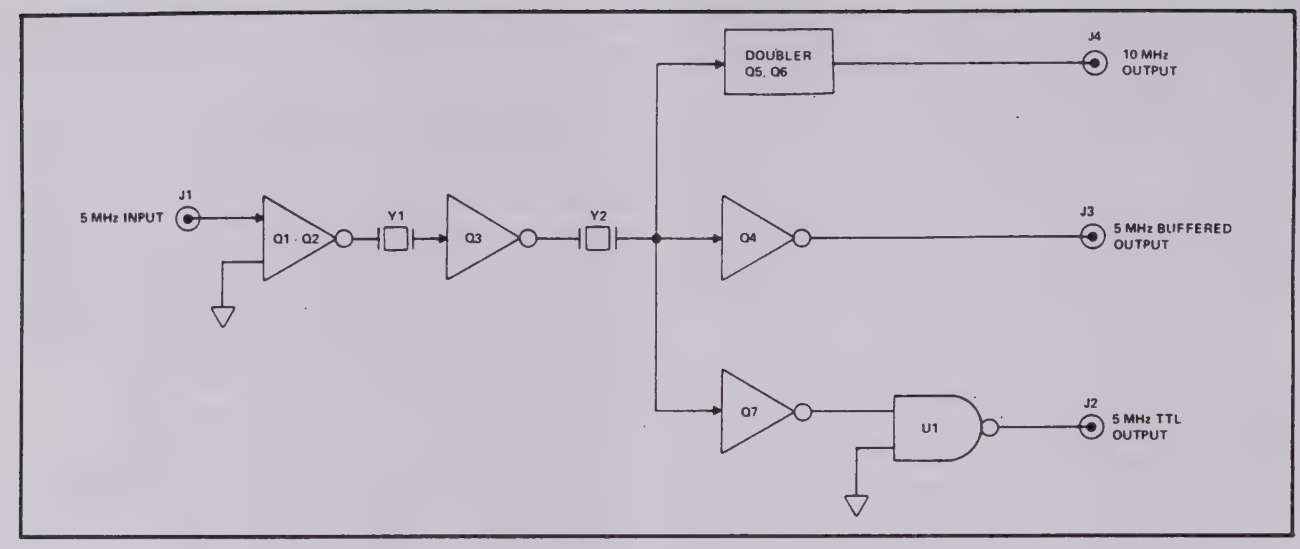

Figure 3-7. INPUT FILTER MODULE BLOCK DIAGRAM

Their resulting condition turns off CR8 and CR9, thus disconnecting R33 and R34 and decreasing the charge current available through Q1 and Q5.

3-58. The resulting voltage developed across C20 functions as a control voltage for the voltage controlled multivibrator, U11. Filtering is provided by a 5 kHz low-pass network consisting of C6 through C11, L2, and L3. A constant high impedance at the filter output is provided by FET, Q7.

3-59. Integrated circuit U11 is a voltage controlled multivibrator (VCM) which produces a 10 to 20 MHz signal dependent upon the dc control voltage supplied by Q7. Capacitors C13 and C23 determine the operating frequency range. Variable capacitor C23 allows adjustment of the VCM frequency for a given dc control voltage. Transistor Q10 clamps the control voltage input and limits the maximum output frequency to 23 MHz. Variable resistor R38 provides adjustment of the maximum output frequency limit. The resulting output at pin 8 of U11 is coupled through C14 to the base of Q2.

3-60. Transistors Q2 and Q3 comprise a differential limiter which translates the VCM output to a symetrical squarewave signal. Negative going inputs cause Q2 to conduct the maximum available current supplied by R13. Transistor Q3 is subsequently cut-off during this period and no output is developed at its collector. When the input goes positive, Q2 is cut-off and Q3 conducts to the maximum available current supplied by R13. The resulting signal across R18 at the collector of Q3 is therefore a symetrical squarewave. Decoupling for the −12V supply is provided by C16 and R19. Transistor Q4 translates the squarewave signal to a TTL level which is applied to pin 9 of U5. The resulting inverted output then functions as a TTL drive input to U3 pin 8, U5 pins 1 and 2, and U6 pin 8.

3-61. The N/1 divider consisting of U1 through U5 and U7 through U9 divide the VCM output by a number (N) dependent upon the BCD commands present in the 1 Hz through 100 Hz decade inputs. The divider actually consists of three cascaded, BCD programmable counters (U3, U8 and U9 and flip-flop U7A). NAND gate U4 and flip-flop U7B function as control circuits for the divider, while U1 and U2 form a 9's complement code converter for the 1 Hz decade counter.

3-62. The divider BCD decade counters of U3, U8 and U9 receive the 1 Hz through 100 Hz decade commands. These commands are loaded into each counter when the Q output at pin 5 of control flip-flop U7 goes high. Code converter U1 and U2 process the 1 Hz BCD inputs such that the inputs to counter U3 are equal to 9 minus the BCD input. For example, 9 equals 0; 8 equals 1; 7 equals 2; etc. Subsequently, U3, which is an up-counter, operates as a down counter. The VCM signal applied to pin 8 of U3 clocks the counter into operation. As U3 counts down from the BCD loaded input, 8 bit transitions from a high to a low are inverted by NAND gate U5 and trigger counter U8. The 10 Hz counter U8 then counts down one count from its BCD input. Thereafter, the 1 Hz counter provides a trigger to the 10 Hz counter for every 10 cycles of the VCM signal, thus functioning as a 10/1 divider. The 10 Hz counter operates in the same manner and provides an 8 bit transition which triggers and 100 Hz counter U9. Counter U9 counts down one count from the BCD loaded input for every 8 bit transition at its pin 6. When the 8 bit output at pin 1 of U9 changes from a high to low, it makes the Q output at pin 8 of flip-flop U7 go high. This high state is applied to pin 12 of NAND gate U4 which also receives the common bus line outputs from pin 12 of U8 and U9. The counters U8 and U9 continue to count down until both reach a count of zero. Their common bus lines (pin 12) then go high and provide another high input to U4. NAND gate U4 also receives the 4-2-1 outputs of U3. When the count of U3 reaches 7, all

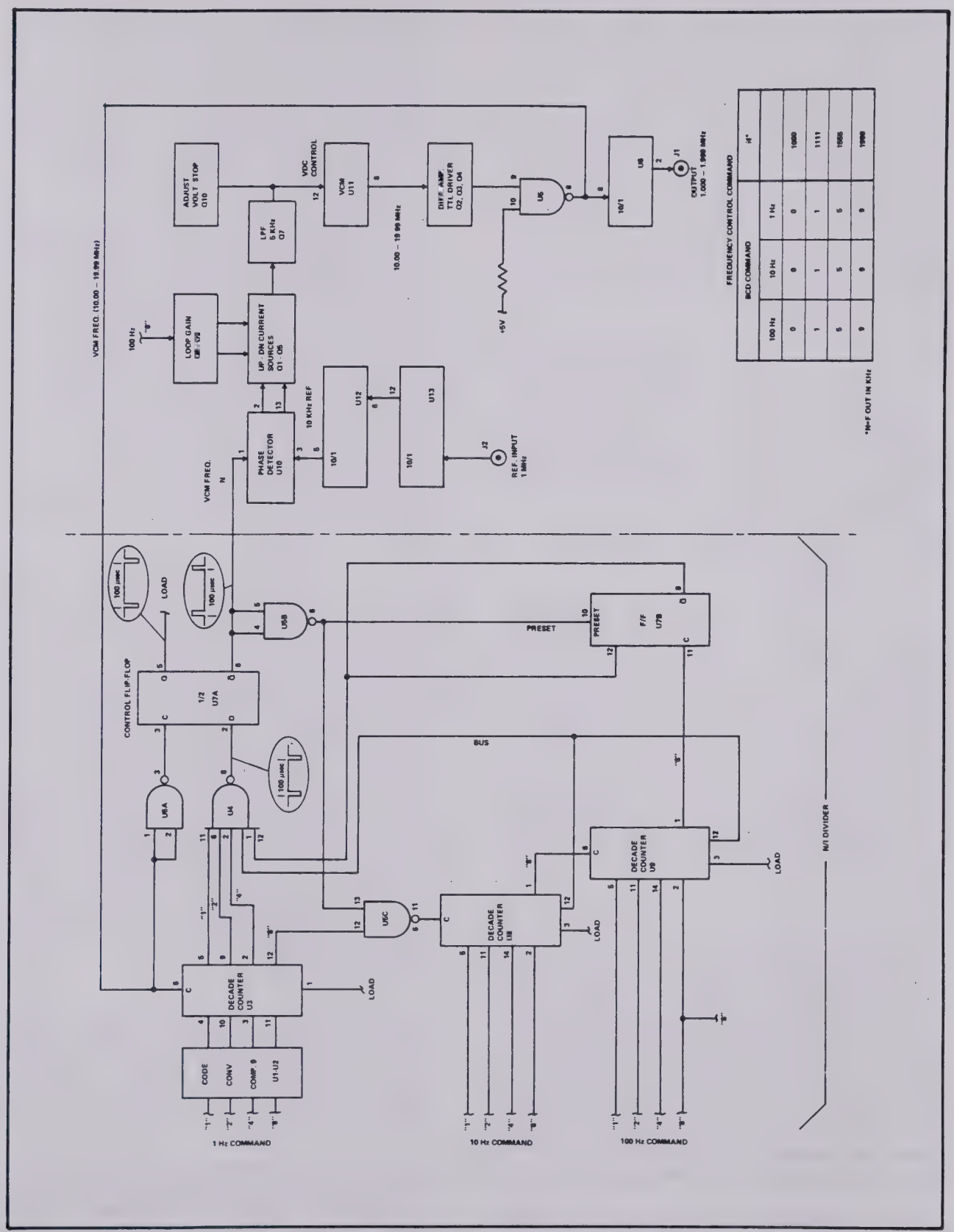

Figure 3-8. RESOLUTION EXTENDER BLOCK DIAGRAM

inputs to U4 are high and a low output is present at pin 8. This low output is applied to pin 2 of flip-flop U7 which then generates a load command on the following 8 count of U3. Presence of the load command, presets the count of each counter to the corresponding BCD decade input. The resulting Q output at pin 6 of U7 is therefore a divided down VCM signal proportional to the 1 Hz through 100 Hz commands. The next VCM input to pin 8 of U3 then causes the process previously described to be repeated. The divided down VCM signal is applied to pin 1 of phase detector U10 and also inverted by U5. The output of U5 is applied to pin 10 of flip-flop U7. The positive going output from U5, which corresponds to the end of a divided down VCM signal, presets U7 for the next division process.

3-63. Phase detector U10 compares the divided down VCM signal to the 10 kHz reference. Any phase offset ($\triangle t$) is detected and alters the voltage charge on C20. This voltage increases or decreases the VCM frequency until the divided down VCM signal has the same phase as the 10 kHz reference. The resulting phase-locked VCM signal is then divided down by 10/1 divider U6 and yields a 1.000 to 1.999 MHz output at J1.

3-64. 1-100 kHz Digit Unit Assembly (6160A-4002)

3-65. The 1-100 kHz Digit Unit (Drawing No. 6160A-1002 Sht. 1 through 3) produces the 1 kHz through 100 kHz digit information. It receives either the 1.000 to 1.999 MHz output of the optional Resolution Extender or a fixed 1 MHz signal, BCD 1 kHz through 100 kHz decade commands, and a 1 MHz reference. The resulting output is a 10.00 to 19.99 MHz signal proportional to the 1 kHz through 100 kHz decade commands. If the optional Resolution Extender signal is applied, additional 1 Hz through 100 Hz digit information is included such that the output is from 10.00000 to 19.99999 MHz. Block diagrams of the 1 kHz through 100 kHz digit sections are shown in Figures 3-9, 3-10, 3-11, and 3-12.

3-66. 1 MHz REFERENCE. The 1 MHz reference input is applied to quad NAND gate U32 (6160A-1002 SHT 3). Each used NAND gate has one input connected to +5V such that the gates function as inverters and level shifters. The output at pin 6 serves as a 1 MHz reference input for phase detectors U6, U18, and U30. Outputs at pins 3 and 8 are applied to the 1 MHz OUTPUT and 1 MHz COMP connectors, respectively. The 1 MHz OUTPUT signal functions as a reference input for the optional Resolution Extender or as the fixed 1 MHz input to this assembly if the Resolution Extender is not installed. The signal at the 1 MHz COMP output is used as a clock input for the Computer assembly.

3-67. 1 kHz DIGIT. Construction of the 1 kHz digit information is done using the circuitry shown in Drawing No. 6160A-1002 Sht. 1. A block diagram of the 1 kHz digit is shown in Figure 3-9. The circuitry consists of a main loop and a step loop. The step loop produces a 9 to 18 MHz signal in 1 MHz increments that is directly proportional to a BCD 1 kHz decade command. The main loop combines the step loop signal and the previous decade signal. The resulting output of the 1 kHz digit is a 1.0 to 1.9 MHz signal proportional to the 1 kHz decade command, plus any previous digit information of 1.0 (000) to 1.9 (999) MHz.

3-68. The step loop produces a 9 to 18 MHz signal which is applied to mixer U12. This signal is available in 1 MHz increments and is proportional to the BCD 1 kHz decade command. Phase detector U6 receives a 1 MHz reference input at pin 1 and a 1 MHz signal from the N/1 divider at pin 3. Any frequency or phase difference is detected by U6 and produces a dc control voltage at pin 8. If the N/1 divider input to pin 3 is higher than the reference, current in the base of Q2 is decreased by U6. Transistor Q6 together with U6 integrate this current decrease such that the dc voltage at pin 8 of U6 is decreased. Current in the base of Q2 is increased when the N/1 divider input to pin 3 of U6 is lower than the reference, thus increasing the control voltage at pin 8. The low-pass filter consisting of L7, C5, C6, and C8 rejects any 500 kHz and above ripple on the dc control voltage.

3-69. The resulting control voltage is applied to pin 12 of U7 which is a voltage controlled multivibrator (VCM). Operator frequency range is 9 to 18 MHz. The 9 to 18 MHz output at pin 8 of U7 is coupled through C1 to the base of Q3. Transistors Q3 and Q4 form a differential limiter which translates the VCM signal to a squarewave. Negative going inputs cause Q3 to conduct the maximum available current supplied by R12. Transistor Q4 is subsequently cut-off during this time and no output is developed in its collector. When the VCM signal goes positive, Q3 is cut-off and Q4 conducts the maximum available current supplied by R12. The resulting squarewave signal at the collector of Q3 is coupled through C12 and applied to pin 2 of U12 via an 18 MHz low-pass filter consisting of L15, C17, C39 and C41. This 9 to 18 MHz signal functions as a linear input for balanced mixer U12. The collector signal of Q4 is converted to a TTL drive level by Q1 and applied to pins 9 and 10 of U5 which is part of the N/1 divider.

3-70. The N/1 divider consisting of U1 through U5 divides the 9 to 18 MHz VCM signal by a number (N) dependent upon the BCD 1 kHz decade command. The resulting divided down output is a 1 MHz signal when the step loop is phase-locked. A simplified block diagram of the N/1 divider is shown in Figure 3-10.

3-71. The divider circuitry consists of an inverter U1, BCD counter U2, dual J-K flip-flop U4, and quad NAND gates U3 and U5. Inverter U1 level shifts the 8-4-2-1 1 kHz decade commands and applies them to U2 and U5. These commands are loaded into U2 when the Q output at pin 14

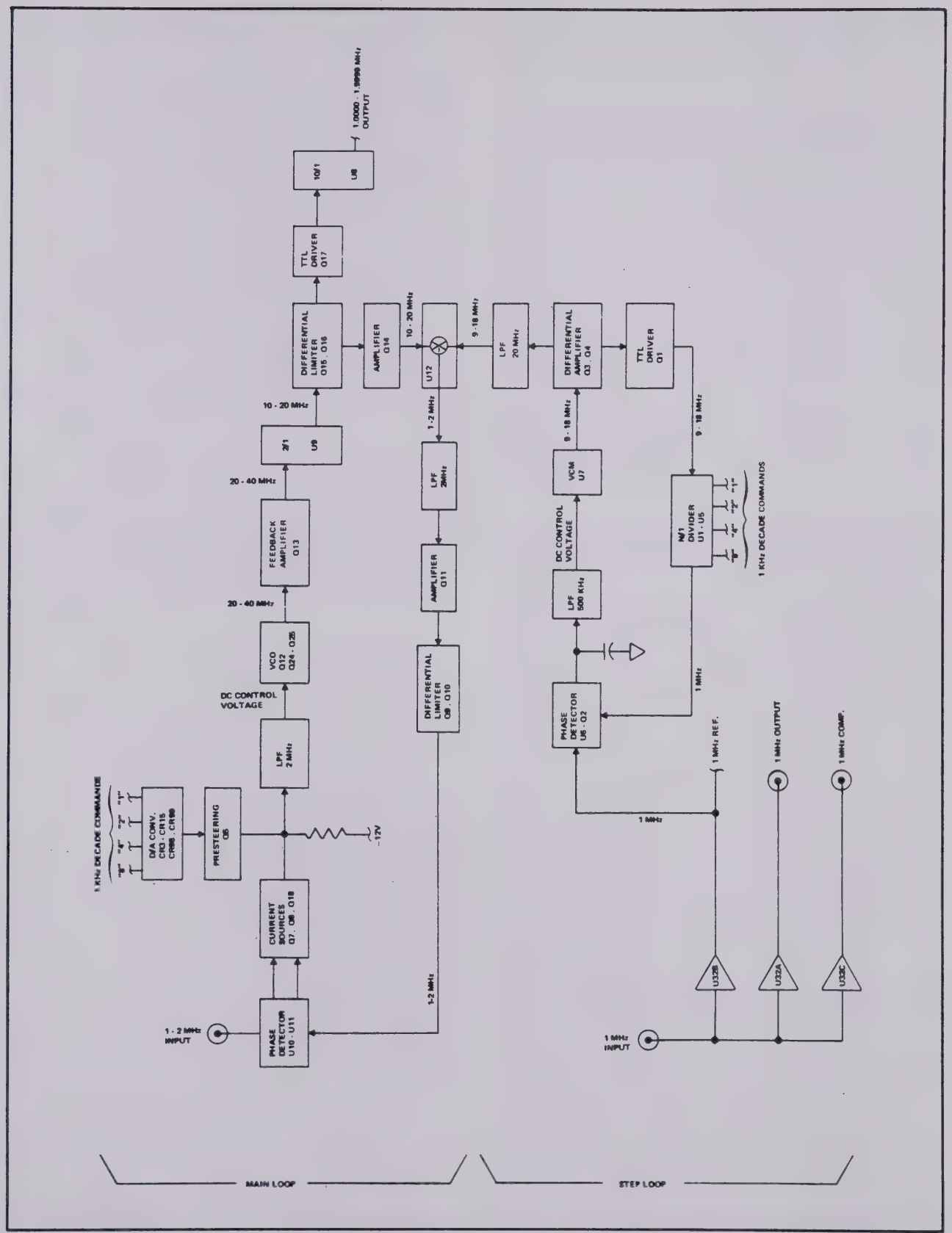

Figure 3-9. 1 kHz D. U. BLOCK DIAGRAM

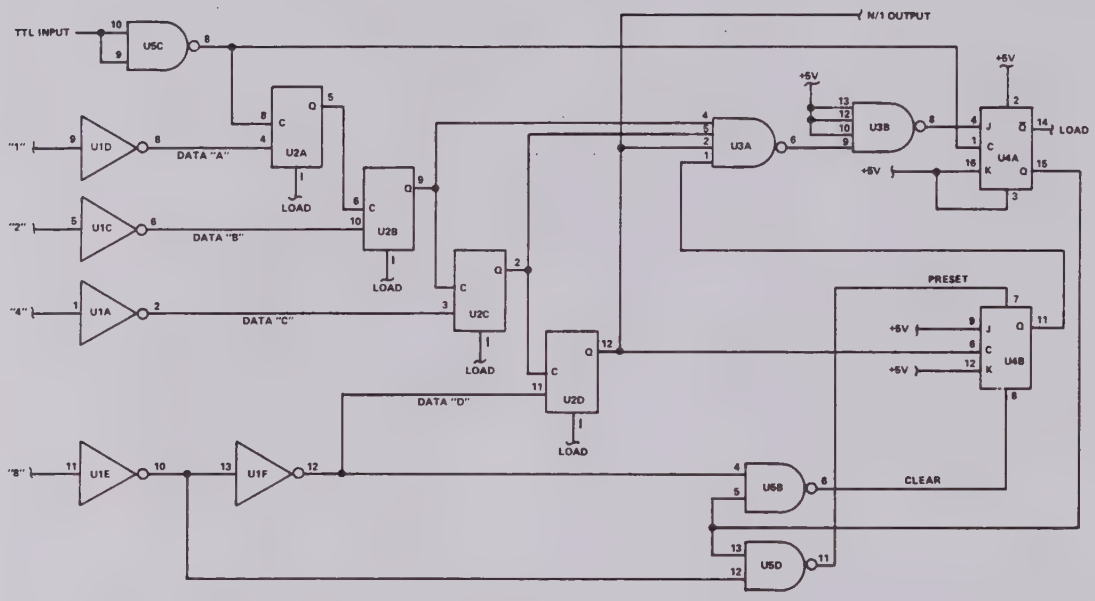

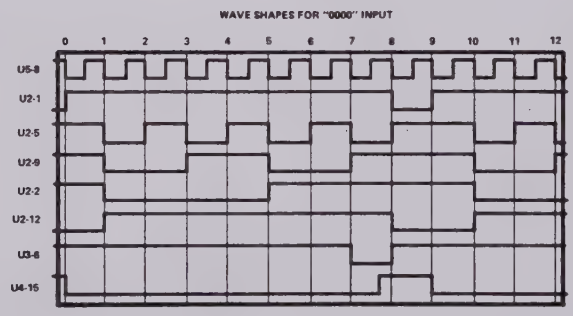

Figure 3-10. N/1 DIVIDER BLOCK DIAGRAM

of U4 is low. The VCM signal inverted by U5 and applied to pin 8 of U2 clocks counter U2 into operation. When the Q outputs at pins 2, 9, and 12 of U2 are all high, the counter will have counted down seven counts from the BCD loaded input. A high input to pin 6 of U4 produces a high Q output at pin 11 at this time, thus making all inputs to pins 1, 2, 4, and 5 of NAND gate U3 high. The resulting low output at pin 6 of U3 is inverted to provide a high output at pin 8. This high is applied to pin 4 of U4 which is the J input of a J-K flip-flop. The next clock input to pin 1 of U4 produces a high Q output at pin 15. Since NAND gate U5 receives this high Q signal at its pins 5 and 13 and a high or low 8 bit command exists at pins 4 and 12, a low output will be applied to pins 7 or 8 of U4. This low will preset or clear U for the next cycle. Coincidental with the high Q output at pin 15 of U4, the Q output at pin 14 goes low and relaods the BCD inputs to U2. The process is then repeated, thus dividing down the VCM signal by a number (N) dependent upon the BCD 1 kHz decade command.

3-72. Phase detector U6, compares the divided down VCM signal to the 1 MHz reference. Any phase offset ($\triangle t$) is detected and increases or decreases the dc control voltage applied to U7. This control voltage increases or decreases the VCM frequency accordingly until both inputs to the phase detector U6 are equal. The resulting VCM signal of 9 to 18 MHz thus corresponds directly with the BCD 1 kHz decade command.

3-73. The main loop combines the step loop signal and previous decade information to produce the 1.0000 to 1.9999 MHz output. The signal applied to the 1 - 2 MHz INPUT connector is either a fixed 1 MHz signal or the 1.000 to 1.999 MHz output of the Resolution Extender. This signal functions as a reference input for the 1 kHz digit main loop. It is applied to pin 1 of quad NAND gate U11, which has one input of each used gate connected to +5V, such that the gates function as TTL amplifiers. The inverted reference output at pin 3 of U11 is applied to pin 3 of phase detector U10. A 1.0000 to 1.9999 MHz signal from the 1 kHz main loop is also inverted by U11 and the resulting signal at pin 6 of U11 applied to pin 1 of U10. Phase detector U10 detects any frequency difference and produces a dc control voltage at pin 8. If the input to pin 1 of U10 is lower in frequency than the reference, current in the base of Q7 is increased by U10. Transistor Q7 together with U10 circuitry integrate this current increase such that the dc voltage at pin 8 of U10 is increased. Current in the base of Q7 is decreased when the input to pin 1 of U10 is higher than the reference, thus decreasing the voltage at pin 8 of U10. A constant current source for Q7 is provided by Q8 via CR18 and R253. The resulting voltage at pin 8 of U10 controls conduction of Q18 which develops a dc control voltage across R44 and R45. This control voltage is dependent upon the current available for Q18, which is supplied by Q8, and the presteering current supplied by Q5. Variable resistor R30 sets the maximum current available through Q8 and the maximum control voltage developed across R44 by conduction of Q8. The low-pass filter consisting of C34, L12, C35, and C37 rejects any 2 MHz and above ripple in the dc control voltage.

3-74. Presteering current supplied by Q5 produces an initial control voltage across R44 which is very close to the voltage developed by the action of the phase detector. This presteering current is dependent upon the 1 kHz decade commands applied to CR7, CR9, CR11 and CR13 and the 1-2-4-8 weighted current provided by the values of R21 through R24. Base bias voltage for Q5 is preset by current through R257 and CR15, CR98 and CR99. Total current through Q5 is equal to current through R20, plus the weighted current available through CR8, CR10, CR12, and CR14. Presence of a bit command (+5V) to CR7, CR9, CR11 or CR13 turns them off and makes the weighted current from R21 through R24 available to Q5. Absence of a bit command (0V) turns on CR7, CR9, CR11, or CR13 which shunts the current from R21 through R24 away from Q5. Variable resistor R20 allows adjustment of the zero bit current through Q5. Presteering voltage developed across R44 is adjustable with R45.

3-75. The voltage controlled oscillator (VCO) consisting of CR24, CR25, L19 and Q12 produces a 20 to 40 MHz signal dependent upon the dc control voltage developed across R44. A constant bias current for Q12 is provided by R46. The resulting conduction of Q12 produces current in L19 which is tapped to provide in-phase emitter feedback through C38 to sustain oscillations. The frequency determining network consists of L19, varicaps CR24 and CR25, and C37. Capacitor C37 provides a low rf impedance, but allows a dc control voltage to be impressed across CR24 and CR25. The resulting value of CR24 and CR25 are dependent upon the applied control voltage and produce a proportional 20 to 40 MHz output from the VCO. This signal is amplified by feed-back amplifier Q13. Gain is controlled by feedback through C42 and R49. The amplified 20 to 40 MHz VCO signal is coupled through C45, clamped at TTL levels by CR20 and CR26, and applied to pins 6 and 8 of 2/1 divider, U9. The resulting 10 to 20 MHz divided down signal at pin 1 of U9 is coupled through C48 and applied to Q15.

3-76. Transistors Q15 and Q16 form a differential limiter which translates the divided down 10 to 20 MHz VCO signal to a symetrical squarewave. Negative going inputs cause Q15 to conduct the maximum available current supplied by R57. Transistor Q16 is subsequently cut-off during this period and no output is developed at its collector. When the input goes positive, Q15 is cut-off and Q16 conducts the maximum available current supplied through R57. The resulting squarewave signal at the collector of Q15 is amplified by driver Q14 to provide a 10 to 20 MHz switching input to pin 5 of balanced mixer, U12. Current driver Q17 translates the squarewave output at the collector of Q16 to a TTL level. This signal is applied to pin 8 of 10/1 divid-

er U8, which produces the 1.0000 to 1.9999 MHz output digit information at pin 2.

3-77. Balanced mixer U12 combines the main loop and step-loop signals. The 2 MHz low-pass filter consisting of L11 and C30 through C33 selects the 1.0000 to 1.9999 MHz difference which is amplified by driver Q11. Differential limiter Q1 and Q10 translate the signal to a squarewave. Operation of Q9 and Q10 is similar to Q15 and Q16. The resulting 1.0000 to 1.9999 MHz at the collector of Q9 is inverted by U11 and applied to pin 1 of phase detector U10. The phase detector then increases or decreases the main VCO frequency until both inputs to U10 pins 1 and 3 are equal in phase and frequency. Subsequently, the divided down 1.0000 to 1.9999 MHz output of U8 contains the 1 kHz digit information, (1.0) 000 to (1.9) 999 MHz, plus any previous digit information, 1.0 (000) to 1.9 (999) MHz.

3-78. 10 kHz DIGIT. Construction of the 10 kHz digit information is done using the circuitry shown in Drawing No. 6160A-1002 Sht. 2. A block diagram of the 10 kHz digit is shown in Figure 3-11. The circuitry consists of a main loop and step loop which are very similar to the 1 kHz digit described previously. The resulting output is a 1.0 to 1.9 MHz signal proportional to the 10 kHz decade command, plus any previous digit information of 1.0 (0000) to 1.9 (9999) MHz.

3-79. The 10 kHz digit is identical to the 1 kHz digit, except for the phase detector and oscillator in the step loop. As a result, only this difference in circuitry is described. The information given in previous paragraphs describing the 1kHz digit is directly applicable to remaining circuitry.

3-80. The step loop phase detector U18 receives a 1 MHz reference input at pin 3 and the output of an N/1 divider at pin 1. The phase detector compares these two inptu signals and produces negative pulses at pins 2 or 13 if any difference in freqnecy and phase exists. If the N/1 divider frequency is higher than the reference, negative pulses will be produced at pin 13 of U18. Negative pulses will be produced at pin 2 of U1B when the N/1 divider frequency is lower than the reference. NAND gate U17 inverts the negative output form pin 2 of U18 producing a positive pulse at pin 3 which switches CR27 off and turns on Q21. Conduction of Q21 supplies an up frequency charge current for C64 via R74. Down frequency charge current for C64 is provided by conduction of Q22 when a negative output is present at pin 13 of U18. Transistor Q20 provides a controlled bleed-off for C64, such that Q21 conducts a constant amount of time equal to nominally 100 msec of the 1 MHz reference period.

3-81. The resulting voltage developed across C64 functions as a control voltage for the VCO composed of CR29, CR30, L25 and Q25. Filtering of the control voltage is done by a 1 MHz low-pass network consisting of L1, L27, L28 and associated capacitors. Transistor Q6 limits the minimum level of the dc control voltage. Operating frequency range of the VCO is from 18 to 36 MHz depending upon the dc voltage impressed across varicaps CR29 and CR30. These varicaps alter the resonant frequency of L25 and control the resulting VCO output frequency. In-phase emitter feed-back via C72 from L25 sustains oscillations.

3-82. The resulting VCO signal is amplified by feed-back amplifier Q26. Gain is controlled by feedback through C73 and R86. The amplified 18 to 36 MHz VCO signal is coupled through C75, clamped at TTL levels by CR31 and CR32, and applied to pins 6 and 8 of 2/1 divider, U19. The resulting divided down 9 to 18 MHz signal at pin 1 of U19 is coupled through C77 to the base of Q27. Remining circuit functions of the 10 kHz step loop are identical to the 1 kHz step loop.

3-83. 100 kHz DIGIT. Construction of the 10 kHz digit information is done using the circuitry shown in Drawing No. 6160A-1002 Sht. 3. A block diagram of the 100 kHz digit is shown in Figure 3-12. The circuitry consists of a main loop and step loop that is identical to the 10 kHz digit, except for deletion of the 10/1 divider in the output of the main loop. Subsequently, the information given in the previous paragraphs is directly applicable. The resulting output is a 10 to 19 MHz signal proportional to the 100 kHz decade command, plus any previous digit information of 10.(00000) to 19.(99999) MHz.

3-84. 1 MHz D. U. Step Loop Module (6160A-4103)

3-85. The 1 MHz D.U. Step Loop Module (Drawing No. 6160A-1003) produces a 9 to 18 MHz step loop signal for the 1 MHz digit section. This signal is available in 1 MHz steps which correspond to 1 MHz decade commands of 0 through 9. A block diagram of the circuitry is shown in Figure 3-13.

3-86. The 5 MHz input to J1 is divided down to a 1 MHz signal by 5/1 divider, U1. Two 1 MHz outputs are available from U1. The output at pin 2 is applied to pin 3 of phase detector U2 where it functions as a reference. The output at pin 12 of U1 is applied to J2 for use as a 1 MHz reference by other circuitry in the synthesizer.

3-87. Phase detector U2 compares the 1 MHz reference input at pin 3 against the nominal 1 MHz signal from the N/1 divider applied to U2 pin 1. If any difference in frequency or phase exists, U2 produces negative pulses at pins 2 or 13. Should the N/1 divider frequency be lower than the reference, negative output pulses will be produced at pin 2 of U2. Negative pulses are produced at pin 13 of U2 when the N/1 divider frequency is higher than the reference.

3-88. NAND gate U3 inverts the negative output pulses at pin 2 of U2 and produces a positive up frequency control

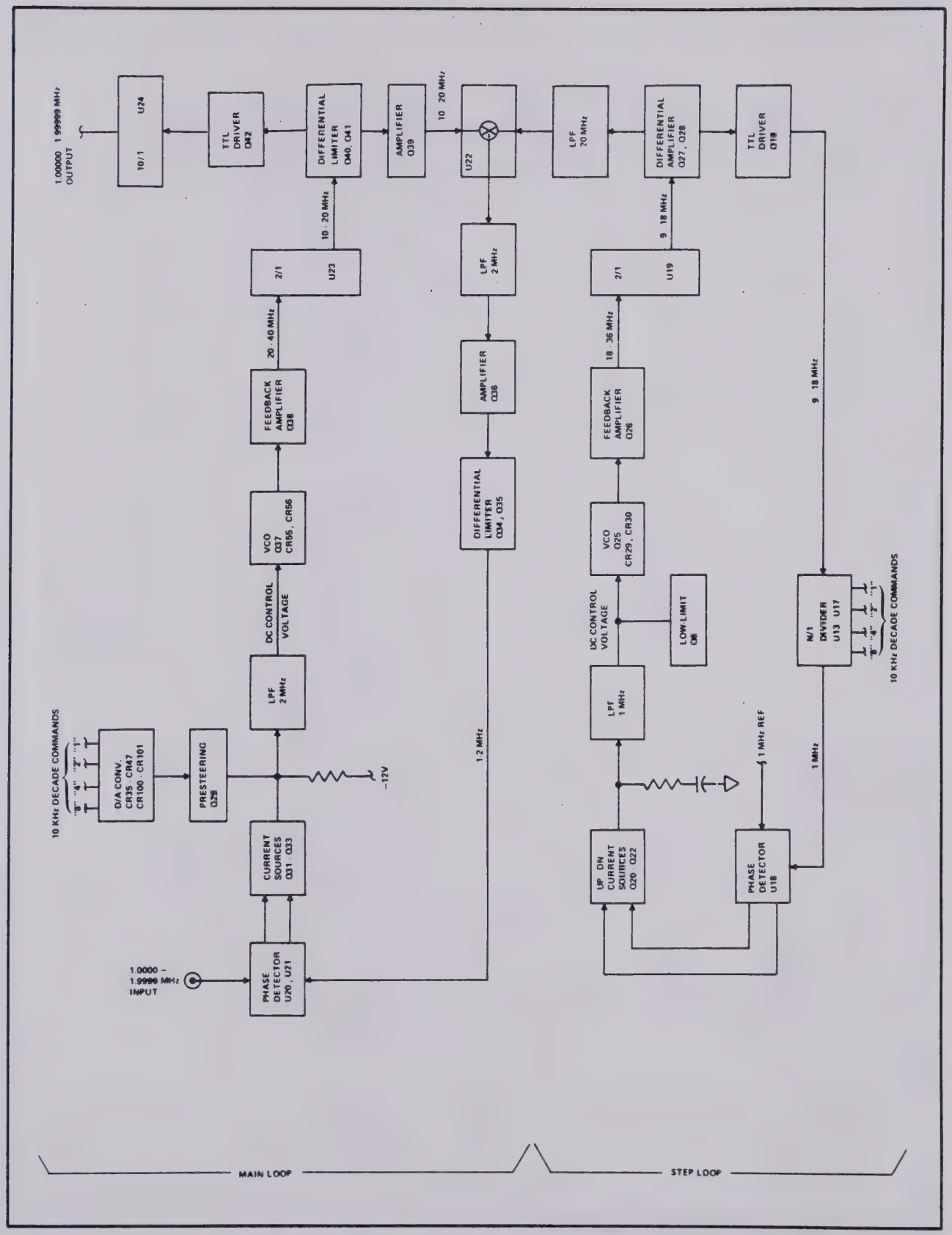

Figure 3-11. 10 kHz D. U. BLOCK DIAGRAM

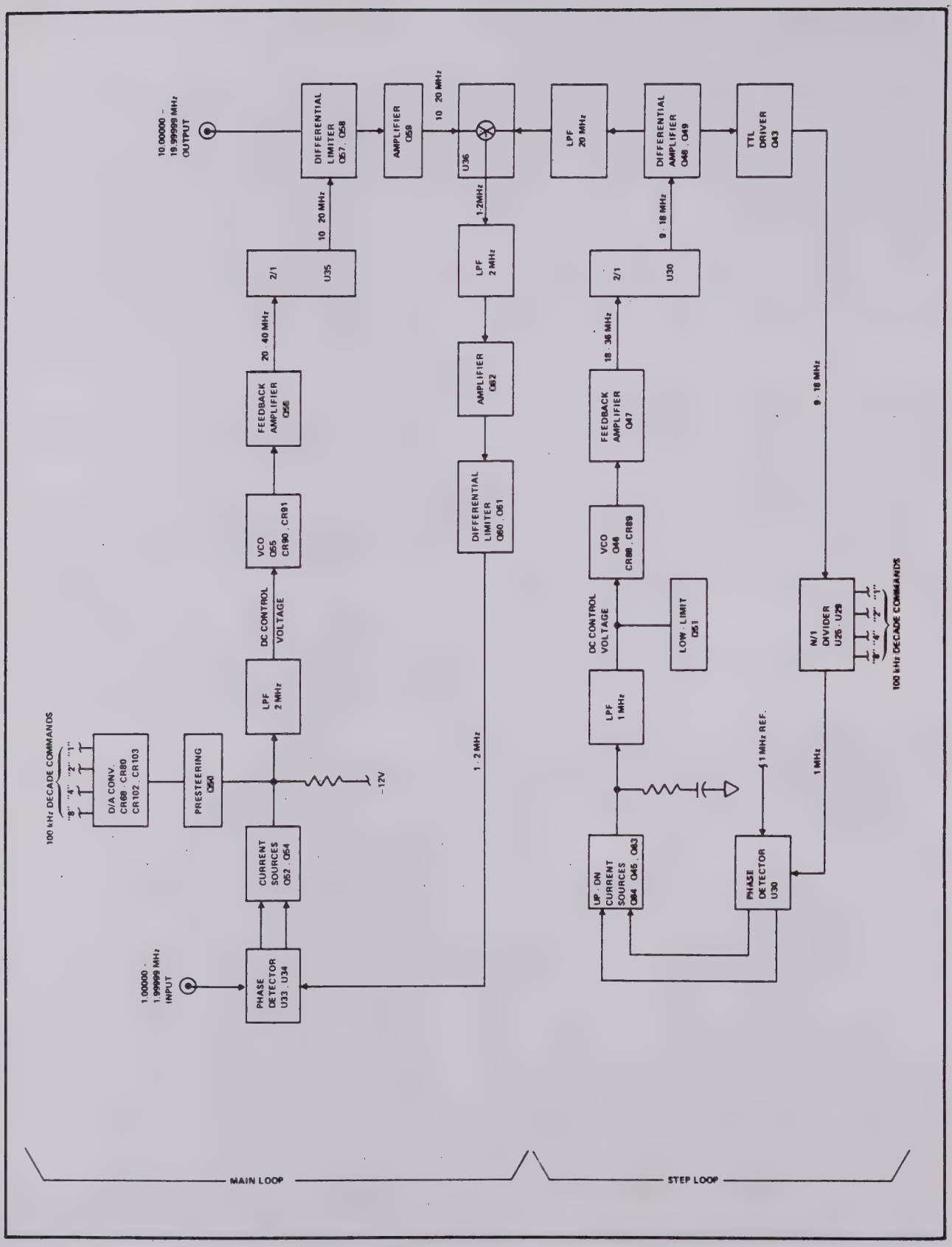

Figure 3-12. 100 kHz D. U. BLOCK DIAGRAM

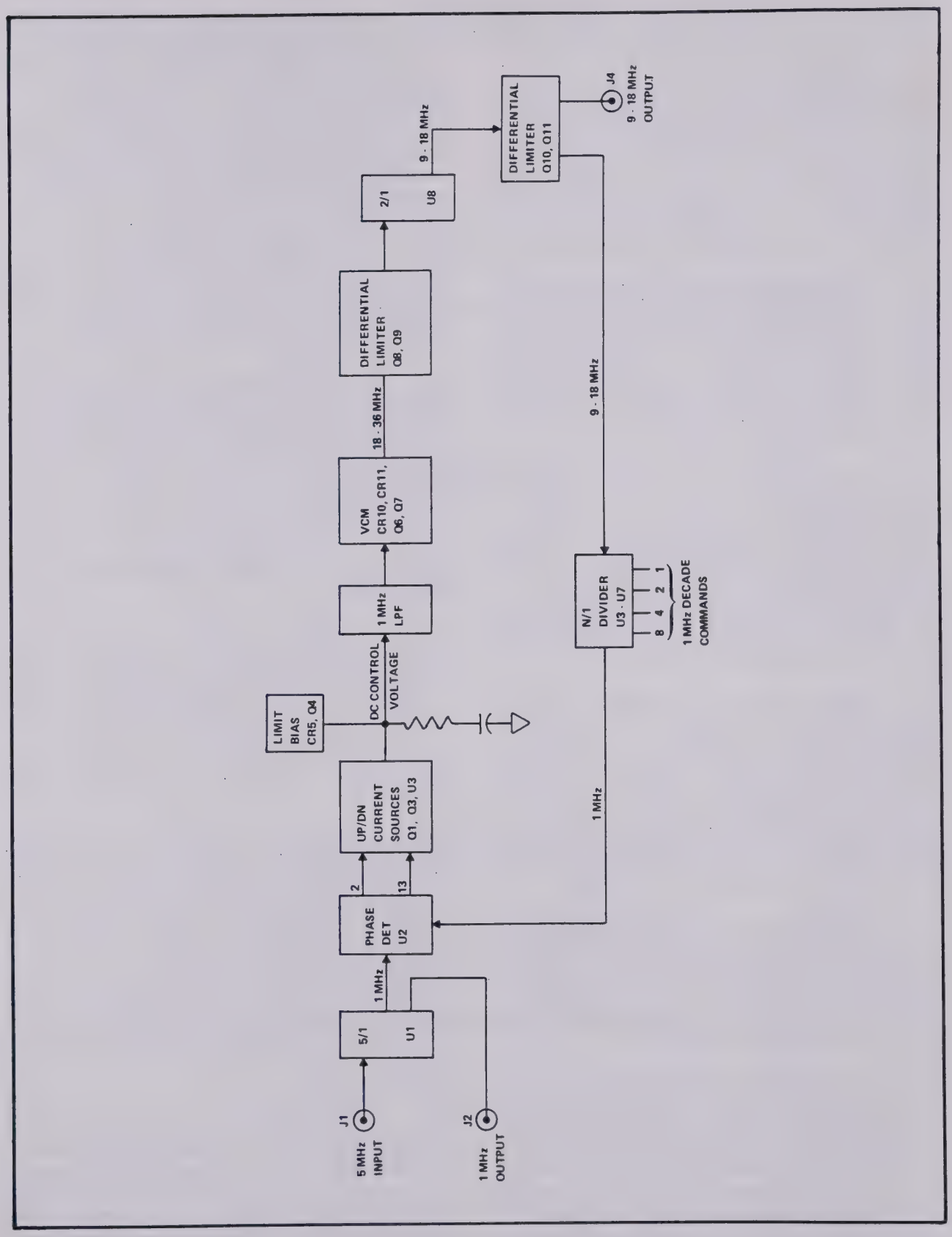

Figure 3-13. 1 MHz D. U. STEP LOOP MODULE BLOCK DIAGRAM

pulse at its pin 11. Presence of this pulse turns off CR3 and CR4 via R1 which turns on Q3. Conduction of Q3 produces an up frequency charge current for C12 via R13. A down frequency charge current for C12 is produced by Q1, which is turned on by negative output pulses from pin 13 of U2 via R2, CR9, and CR1. Controlled bleed-off of the voltage developed across C12 is provided by Q2. Transistor Q4 and diode CR5 limit the minimum and maximum levels of the dc control voltage across C12. A 1 MHz low-pass filter consisting of L13 through L16 and associated capacitors removes any 1 MHz and above ripple on the dc control voltage.

3-89. The VCM consisting of tuned circuit CR10, CR11 and T1 and multivibrator Q6 and Q7 produces an 18 to 36 MHz signal. The frequency at which it operates is dependent upon the control voltage applied to varicaps CR10 and CR11. This control voltage determines the capacitance value of the varicaps and the resonant frequency of the tuned circuit. The 18 to 36 MHz output signal at the collector of Q6 is applied via R19 to the base of Q8.

3-90. Transistors Q8 and Q9 form a tuned differential limiter which translates the VCM signal to a symmetrical squarewave. A positive going input causes Q8 to conduct the maximum current available through R36. Transistor Q9 is cut-off during this period and no signal is developed in its collector. When the input to Q8 goes negative, Q8 is cut-off and Q9 conducts the maximum current available through R36. The resulting squarewave signal at the collector of Q9 (T2) is coupled via C34 to pins 6 and 9 of U8.

3-91. Integrated circuit U8 is a 2/1 divider. The 18 to 36 MHz input to pins 6 and 9 is divided down to provide a differential 9 to 18 MHz resultant at pins 1 and 13. The network consisting of CR7, CR12, CR32, and R26 provides correct bias at the input of U8. Amplitude limiter Q10 and Q11 limit the differential output of U8. Capacitor C31 couples the output from Q10 to J4. Current driver Q5 translates the output of Q11 to a TTL level required to drive NAND gate U3, which is part of the N/1 divider.

3-92. The N/1 divider consisting of U3 through U7 divides the 9 to 18 MHz input signal by a number (N) dependent upon the BCD 1 MHz decade command. The resulting output of the N/1 divider is a 1 MHz signal when the 1 MHz step loop is phase-locked. A simplified block diagram of the N/1 divider is shown in Figure 3-14.

3-93. The divider circuitry consists of inverter U7, BCD counter U6, dual J-K flip-flop U4, and NAND gates U3 and U5. Inverter U7 level shifts the 8-4-2-1 coded 1 MHz decade commands and applies them to U3 and U6. These commands are loaded into U6 when the Q output at pin 14 of U4 is low. The 9 to 18 MHz signal inverted by U3 and applied to pin 8 of U6 clocks counter U6 into operation. When the Q outputs at pins 2, 9, and 12 of U6 are all high, the counter will have counted down seven counts from the BCD loaded input. A high input to pin 6 of U4 produces a high Q output at pin 11 at this time, thus making all inputs to pins 1, 2, 4 and 5 of NAND gate U5 high. The resulting low output at pin 6 of U5 is inverted to provide a high output at pin 8. This high is applied to pin 4 of U4, which is the J input of a J-K flip-flop. The next clock input to pin 1 of U4 produces a high Q output at pin 15. Since NAND gate U3 receives this high Q signal at its pins 2 and 5 and a high or low 8 bit command exists at pins 1 and 4, a low output will be applied to pin 7 or 8 of U4. This low clears or presets U4 for the next cycle. Coincidental with the high Q output at pin 15 of U4, the Q output at pin 14 goes low and reloads the BCD inputs to U6. The process is then repeated, thus dividing down the 9 to 18 MHz signal by a number (N) dependent upon the BCD 1 MHz decade command.

3-94. Phase detector U2 compares the divided down 9 to 18 MHz signal to the 1 MHz reference derived from U1. Any phase offset (Δt) is detected and increases or decreases the dc control voltage applied to the VCM. This control voltage increases or decreases the VCM frequency accordingly until both inputs to phase detector U2 are equal. The resulting 9 to 18 MHz output at J4 thus corresponds directly with the BCD 1 MHz decade command.

3-95. 1 MHz D. U. Main Loop VCO Module (6160A-4105)

3-96. The 1 MHz D. U. Main Loop VCO Module (Drawing No. 6160A-1005) produces a 10 to 19 MHz output containing the 1 MHz digit information. This signal is available in 1 MHz increments and corresponds to the 1 MHz decade commands. Any previous digit information is included, thus providing a total range in output from 10.000000 to 19.999999 MHz. A block diagram of the circuitry is shown in Figure 3-15.

3-97. The nominal 10 to 20 MHz input to J4 is coupled via C15 to the base of Q17. Transistors Q16 and Q17 form a differential limiter which translates the input to a symmetrical squarewave. Negative going inputs cause Q17 to conduct the maximum current available through R42. Transistor Q16 is cut-off during this period and no signal is developed at its collector. When the input to Q17 goes positive, Q17 is cut-off and Q16 conducts the maximum current available through R42. The resulting squarewave signal at the collector of Q16 is applied via emitter follower Q15 to pin 8 of U3. Transistor Q15 provides current gain as well as impedance matching.

3-98. Integrated circuit U3 is a 10/1 divider. The 10 to 20 MHz input to its pin 8 is divided down to provide a nominal 1 to 2 MHz signal at pin 12. This signal is applied to pin 1 of phase detector U2, which also receives a 1 to 2 MHz input at pin 3 from J3. Phase detector U3 compares these two signals and produces negative output pulses at pins 2 or 13 if any difference in frequency or phase exists. If the

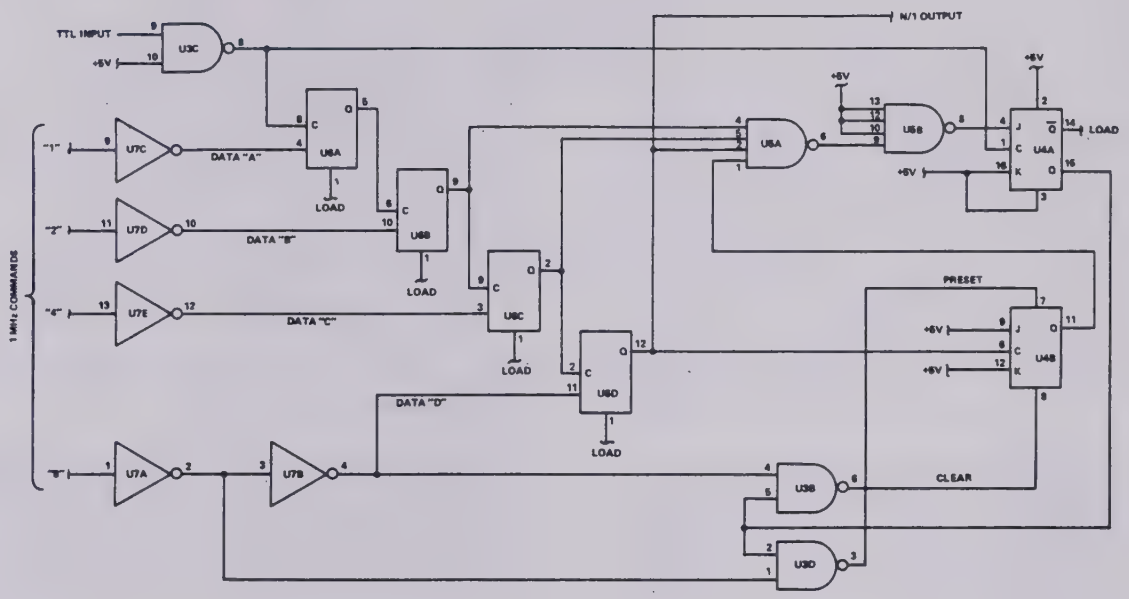

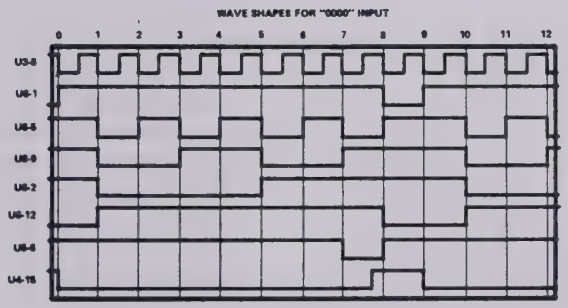

Figure 3-14. 1 MHz STEP LOOP N/1 DIVIDER

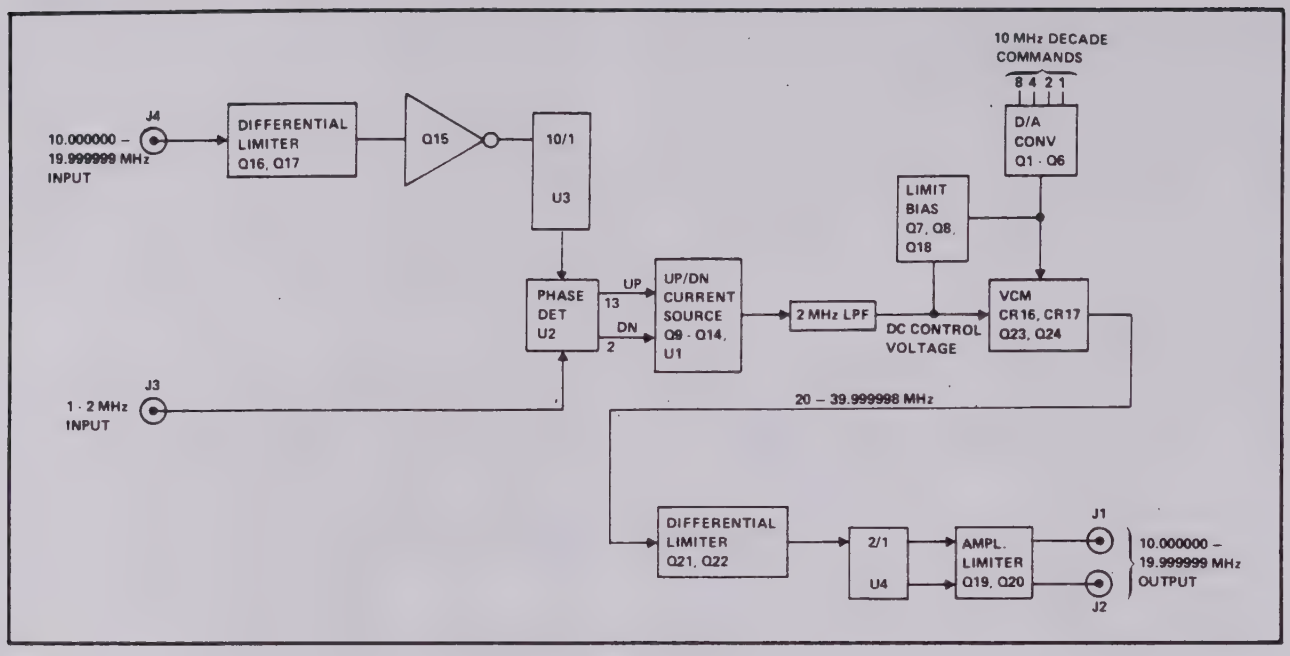

Figure 3-15. 1 MHz D. U. MAIN LOOP VCO MODULE BLOCK DIAGRAM

input to pin 1 of U2 is higher in frequency then the input to pin 3, a negative pulse will be produced at pin 2 of U2. A negative pulse will be produced at pin 13 of U3 if the input to pin 3 is higher in frequency than pin 1. NAND gate U1 inverts the outputs of U3 and produces positive up and down frequency control pulses at pins 11 and 8, respectively. Presence of an up frequency pulse at pin 11 of U1 turns off CR8 which turns on Q13. Conduction of Q13 turns on Q11 and provides an up frequency charge current for C11 via R35. A down frequency charge current for C11 is provided by Q14, which is turned on via CR11 by a positive down pulse output at pin 8 of U1. Controlled bleed-off of the voltage developed across C11 is provided by Q10. Transistors Q9 and Q12 temperature compensate Q10 and Q11.

3-99. The resulting voltage developed across C11 functions as a control voltage for a voltage controlled multivibrator (VCM). This voltage is applied to varicaps CR16 and CR17 via two separate 2 MHz low-pass filters composed of C12, L11, C19 and C18, L12, C23, L12, C20, C21. Transistor Q18 functions as a clamp which limits the maximum level of the control voltage. Varicaps CR16 and CR17 also receive a presteering voltage via T1 from the digital-to-analog converter, Q1 through Q7. This presteering voltage is dependent upon the 1 MHz decade commands applied to CR1 through CR4 and the 8-4-2-1 weighted current provided via Q1 through Q4 from resistors R1 through R5. Presence of a bit command (+5V) to CR1 through CR4 turns them off and makes the weighted current from R1 through R4 available through Q1 through Q4. Absence of a bit command (0V) turns on CR1 through CR4 which then shunt the current available via R1 through R4 away from Q1 through Q4. Transistors Q5 provides a "0" weight current adjustable by R8. Temperature compensation is provided by Q6. Variable resistor R11 allows adjustment of the maximum presteering voltage developed across it and R15. Transistor Q7 functions as a clamp which limits the maximum level of the presteering voltage. Variable resistor R16 sets the clamp point of Q7 and Q18 via Q8.

3-100. The VCM consisting of tuned circuit CR16, CR17, and T1 and multivibrator Q23, Q24 provides a 20 to 40 MHz signal. The frequency at which it operates is dependent upon the control voltage applied to varicaps CR16 and CR17. This control voltage determines the capacitance value of the varicaps and the resonant frequency of the tuned circuit. The 20 to 40 MHz output at the collector of Q24 is translated to a symmetrical squarewave by differential limiter, Q21 and Q22. Operation of the differential limiter is essentially the same as Q16 and Q17, described previously.

3-101. The 20 to 40 MHz squarewave at the collector of Q21 is coupled through C28 and applied to 2/1 divider, U4. Network CR14, CR15, C27, R49, and R50 provide correct levels at the input of U4. Integrated circuit U4 divides the VCM signal down and provides a differential 10 to 20 MHz resultant at pins 1 and 13. Transistors Q19 and Q20 limit the amplitude of the output signals applied to J1 and J2. Operation of Q19 and Q20 is similar to Q16 and Q17 described previously.

3-102. 1 MHz D. U. Mixer Module (6160A-4104)

3-103. The 1 MHz D.U. Mixer Module (Drawing No. 6160A-1004) combines the nominal 10 to 20 MHz main loop and 9 to 18 MHz step loop signals of the 1 MHz digit section. The 1 to 2 MHz difference is then used to phase-lock the main loop in the 1 MHz digit section. A block diagram of the circuitry is shown in Figure 3-16.

3-104. The 9 to 18 MHz step loop input to J2 is filtered with two low-pass filters consisting of C38, L13, C37 and C14, L4, L3, C11, C12, C13, C10 to remove a ripple above 18 MHz. Resistors R8, R9, and R10 form a matching pad between the two low-pass filters. The filtered 9 to 18 MHz signal is then applied to pin 6 of mixer U1 where it functions as the linear input. A 10 to 20 MHz main loop input to J1 is translated to a symmetrical squarewave by tuned differential limiter Q1 and Q2. Negative going inputs to Q1 cause it to conduct the maximum current available through R1. Transistor Q2 is cut-off during this period and no signal is developed in its collector. When the input to Q1 goes positive, it is cut-off and Q2 conducts the maximum current available through R1. The resulting 10 to 20 MHz squarewave at T1 is filtered by C5, L1, C6, C7, L2, C8 and C9 to remove any ripple above 20 MHz. The filtered signal is applied to pin 1 of mixer U1 where it functions as a switching input.

3-105. Mixer U1 combines the 9 to 18 MHz step loop and 10 to 20 MHz main loop signals. The 2 MHz low-pass filter consisting of C35, C36, L8, C33, L5, L6 and C15 through C19 passes the 1 to 2 MHz difference frequency. Driver Q3 amplifies the 1 to 2 MHz resultant which is then further filtered by 2 MHz low-pass filter C22, L7, and C24. The signal is then translated to a symmetrical squarewave by differential limiter Q4 and Q5. Transistors Q6 and Q7 limit the amplitude of the signal from Q4 and Q5. Operation of both these circuits is similar to Q1 and Q2 described previously. The amplified and limited 1 to 2 MHz output of Q7 is then amplified by current driver Q8 and made available to J4 where it is used to phase-lock the main loop in the 1 MHz digit section.

3-106. 10 MHz D.U. Step Loop VCO Module (6160A-4107-1)

3-107. The 10 MHz D.U. Step Loop VCO Module (Drawing No. 6160A-1007-1) produces a 70 to 140 MHz step loop signal for the 10 MHz digit section. This signal is available in 10 MHz steps which correspond to 10 MHz decade commands of 0 to 7. A block diagram of the circuitry is shown in Figure 3-17.

3-108. The dc control voltage applied to J1 is processed by current sources Q21 and Q22 which produce a dc control across C25 via R57. In a static condition (OV input), the opposing currents supplied through Q21 and Q22 counterbalance each other such taht the voltage across C25 is constant. A positive going input at J1 decreases conduction of Q22, thus providing an increase in voltage across C25 via current source Q21. The opposite is true for a negative going input to J1. Transistor Q24 supplies bias current for Q22 in relation to any change in voltage across C25. Variable resistor R60 allows adjustment of the threshold current switching point of Q21 and Q22.

3-109. A 10 MHz low-pass filter consisting of C19, C20, C21, C24, L14, and L15 removes any ripple at or above 10 MHz in the voltage across C25. This filtered dc control voltage is thena pplied to a 70 to 140 MHz VCO.

3-110. The VCO composed of CR5 through CR8, Q14, and aprinted circuit inductor produces a 70 to 140 MHz signal dependent upon the dc control voltage across C25. Capacitance value of varicaps CR5 through CR8 depends on the applied control voltage. There varicaps together with the tapped printed circuit board inductor form a tuned circuit. Conduction of Q14 develops a signal that is coupled via C16 to the tuned circuit. Regenerative feedback to the base of Q14 via R30 sustains oscillations at the resonant frequency of the tuned circuit. Transistor Q13 buffers the VCO signal, which is then coupled via T3 and C12 to Q12.

3-111. Transistors Q11 and Q12 form an differential limiter which translates the 70 to 140 MHz VCO signal to a

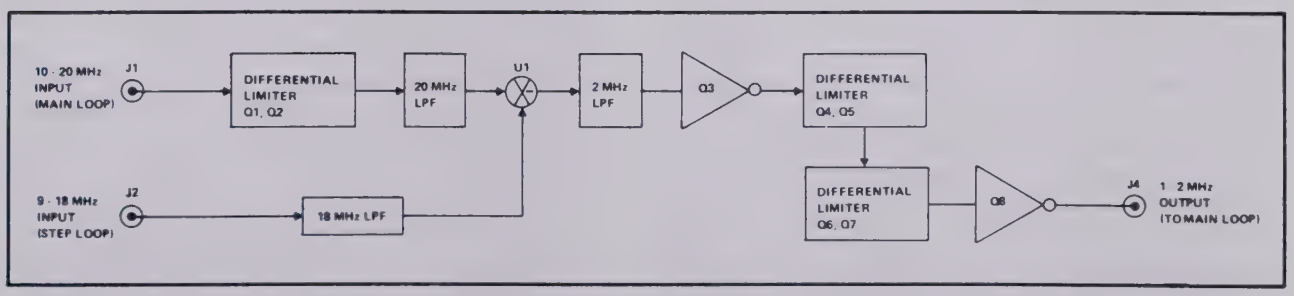

Figure 3-16. 1 MHz D. U. IF MIXER MODULE BLOCK DIAGRAM

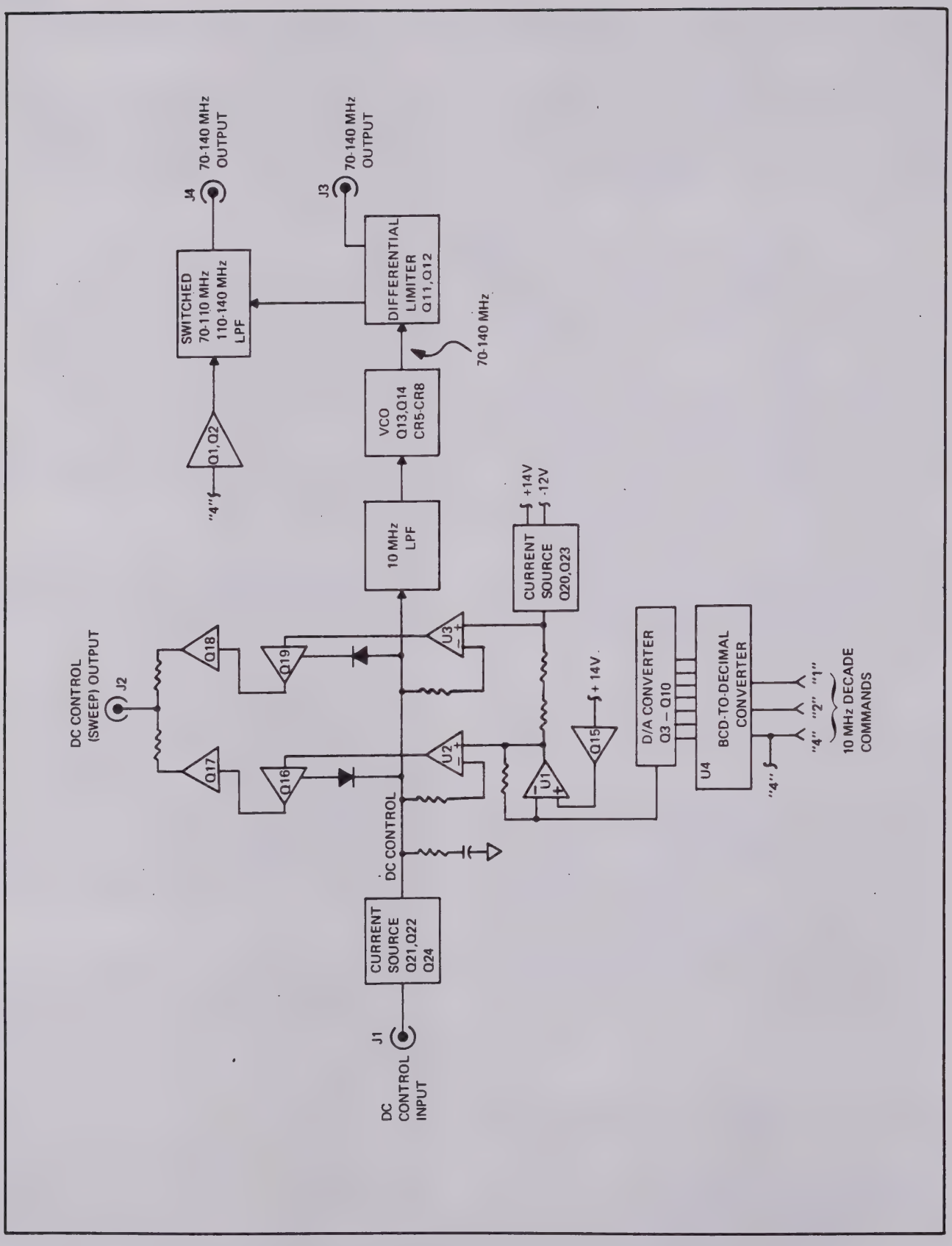

Figure 3-17. 10 MHz D.U. STEP LOOP VCO MODULE BLOCK DIAGRAM (6160A-4107-1)

squarewave. The output of Q11 is applied to J3 via R18 and T1. The output of Q12 is passed through a switched, low-pass filter consisting of C1 through C4 and L1 through L5. When the VCO frequency is from 70 to 100 MHz (10 MHz decade commands of 0 through 3), transistor Q1 is switched on by the 0V ("4" bit absent) emitter voltage via CR9. Conduction of Q1 turns on Q2 which then turns on diodes CR1 through CR4. Capacitors C1 and C4 are subsequently placed in parallel with C2 and C3 and lower the switched filter cut-off frequency to nominally 110 MHz. Presence of a 10 MHz decade command of 4 thru 7 (4 bit present) produces a +2V or greater emitter voltage at Q1, thus turning it off. Q2 is also switched off by this condition, and diodes CR1 through CR4 are switched off by the resulting −12V collector voltage of Q2. Capacitors C1 and C4 are subsequently disconnected from the switched filter, increasing its cut-off frequency to nominally 140 MHz.

3-112. Presteering the VCO frequency to approximately the correct point is done via U4, Q3, through Q10, and U1 through U3 together with Q16 through Q19, and Q20, Q23. The 10 MHz commands (4-2-1) are converted to decimal information by U4. This decimal information then controls conduction of Q4 through Q10, which produceproportional decimal weighted voltages at the input to U1. The resulting output of U1 is compared to the dc control voltage applied to the VCO via U2 and U3. If the potential difference is greater than 0.6V, the output of U2 or U3 is then used to force the VCO control voltage to nearly the correct value by conduction of Q16 or Q19.

3-113. The 10 MHz decade commands are converted to decimal information by U4. Presence of a decimal output (0V) from U4 turns off the diode associated with Q4 through Q10 and allows the transistors to provide a proportional decimal weighted voltage at their collectors. Absence of a decimal output (+2 to +5V) from U4 turns on the diode associated with Q4 through Q10, which switches the transistors off. Transistor Q3 together with R8 form a temperature compensated bias supply for Q4 through Q10. Variable resistors in the emitter circuits of Q4 through Q10 allow adjustment of the decimal weighted voltage increments.

3-114. Integrated circuit U1 is a differential, operational amplifier. It compares the decimal weighted output of Q4 through Q10 to a fixed reference established by Q15. Variable resistor R70 allows adjustment of the reference and subsequently the "0" decimal voltage equivalent. The resulting output of U1 produces a voltage across R36 and R42 that is decimal weighted to the 10 MHz commands. This voltage is applied to one input of comparator amplifier U2. Transistors Q20 and Q23 produce a reference current through R42 and R36 which establishes a maximum voltage reference input to U3, another comparator amplifier. Since this reference input to U3 is affected by the output of U1, the inputs of U2 and U3 track approximately 0.6V apart, thus establishing a "window" voltage dependent upon the 10 MHz commands. An example of the "window" voltage is shown in Figure 3-18.

3-115. Comparator amplifiers U2 and U3 each receive a sample of the dc control voltage at their other input via R35 and R41. Should this input be above or below the other input to U2 or U3, one or the other conducts and switches on transistor Q16 or Q19. Conduction of Q16 or Q19 then provides a rapid charge or discharge current to C25 via CR17 or CR19 that brings the dc control voltage to within 0.6V of its correct value. Transistors Q17 or Q18 are also switched on by conduction of Q16 or Q19 and provide a plus or minus sweep control output at J2. This sweep control voltage causes the input to J1 to rapidly approach its correct value via another circuit in the 6160A-4106-1 module.

3-116. 10 MHz D.U. Step Loop P.D. Module (6160A-4106-1)

3-117. The 10 MHz D.U. Step Loop P.D. Module (Drawing No. 6160A-1006-1) receives a 10 MHz reference signal and a 70 to 140 MHz step loop signal and dc sweep voltage from the 10 MHz digit section. It compares the two rf signals and produces a dc control voltage which phase-locks the 10 MHz step loop section. The dc sweep voltage (present when the 10 MHz step loop is not phase-locked) is processed to provide a rapid change in dc control voltage output necessary to achieve phase-lock. A block diagram of the circuitry is shown in Figure 3-19.

3-118. The 10 MHz reference input at J4 is amplified by differential driver Q10 and Q11. Transformer T4 sums the outputs of Q10 and Q11 and couples the signal to the following spectrum generator. Transistor Q12 provides a constant current for Q10 and Q11. Variable resistor R27 allows adjustment of this current and subsequently the output drive level of this signal at T4.

3-119. Step-recovery diode CR11 together with T3 form a spectrum generator which produces a series of pulses rich in harmonics of 10 MHz. Variable resistor R34 adjusts the bias on CR11. The resulting spectrum signal is tapped at T3 and applied via an impedance matching pad consisting of R39, R40 and R41 to a switched, band-pass filter.

3-120. The switched filter consists of L1, L2, L8 through L11, L20, C31 and C34 through C39. It passes only frequencies between 70 to 110 MHz or 110 to 150 MHz, depending upon the condition of the "4" 10 MHz decade command. Absence of this command (0V), turns off Q13 and Q16 and switches on Q14 and Q15. Conduction of Q15 turns on diodes CR4 through CR7 and places C37, C39 in parallel with C36 and C38. Since Q16 is off, diode CR18 is also off and L11 together with C35 are in series with L20. This condition provides an overall 70 to 110 MHz band-pass characteristic for the filter. Presence of the "4" command (+5V), turns on Q13 and Q16 and switches Q14 and Q15 off.

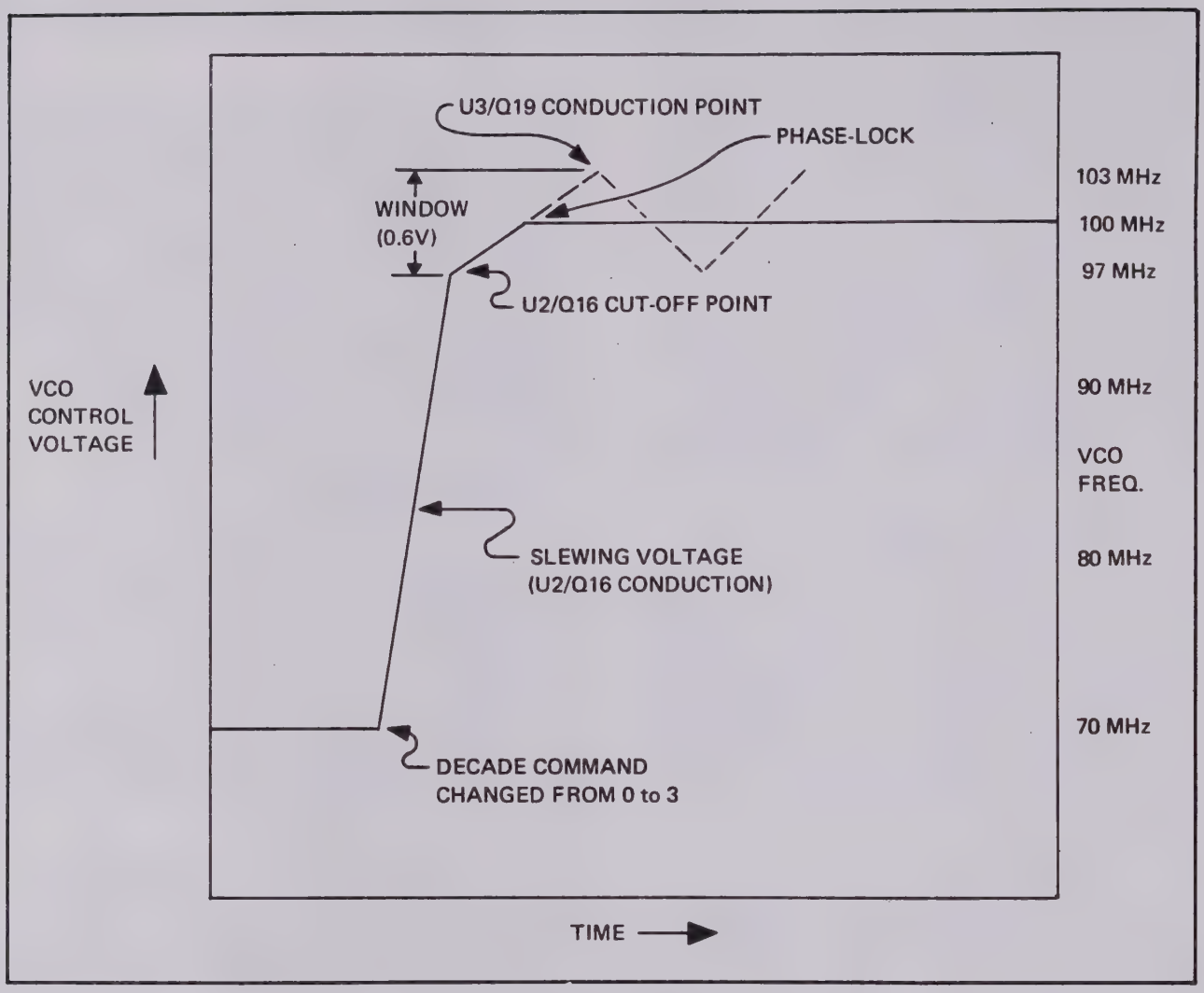

Figure 3-18. VCO "WINDOW" VOLTAGE

Conduction of Q16 turns on CR18 via CR8 and grounds the junction of L20, L11. With Q15 off, diodes CR4 through CR7 are also off, which disconnects C37 and C39. Overall response of the bandpass filter is subsequently 110 to 150 MHz in the presence of a "4" bit command. The resulting filtered band-pass signal is then applied directly to one input of phase detector U3.

3-121. The 70 to 140 MHz input at J1 is amplified by differential driver Q1 and Q2. The resulting amplified signal is summed in T1 and coupled via a 150 MHz low-pass filter composed of L6, L7, and C7 through C12 to one input of U3. Balanced mixer U3 compares the 70 to 140 MHz input at pin 1 to the 70 to 100 MHz or 110 to 140 MHz input at pin 6 and produces a plus or minus output at pin 4 which is proportional to any offset. The 10 MHz low-pass filter composed of L12, L21, and C13 through C16 removes any ripple above 10 MHz. Variable capacitor C13 allows adjustment of the filter-"notch" response to 10 MHz. The resulting filtered signal is applied via R53 to J2. This signal or dc voltage is then used to control the precise frequency of a VCO in the 6160A-4107-1 Module and phase-lock the 10 MHz digit step loop.

3-122. When the 10 MHz digit, step loop is out-of-lock, the circuitry consisting of Q3 through Q9, U1, and U2 produces a positive or negative dc output at J2. This output causes the 10 MHz digit step loop to approach the correct phase-lock point.

3-123. Presence of a positive or negative dc input to J3 exists when the step loop is grossly un-locked. This input causes flip-flop Q8 and Q9 to provide a positive gate to U1A or U1B, depending on the polarity of the input to J3. If a positive input is present, the output of Q9 is +5V and U1A receives a positive gate. Should the input to J3 be negative, the output of Q8 is +5V and U1B receives a positive gate.

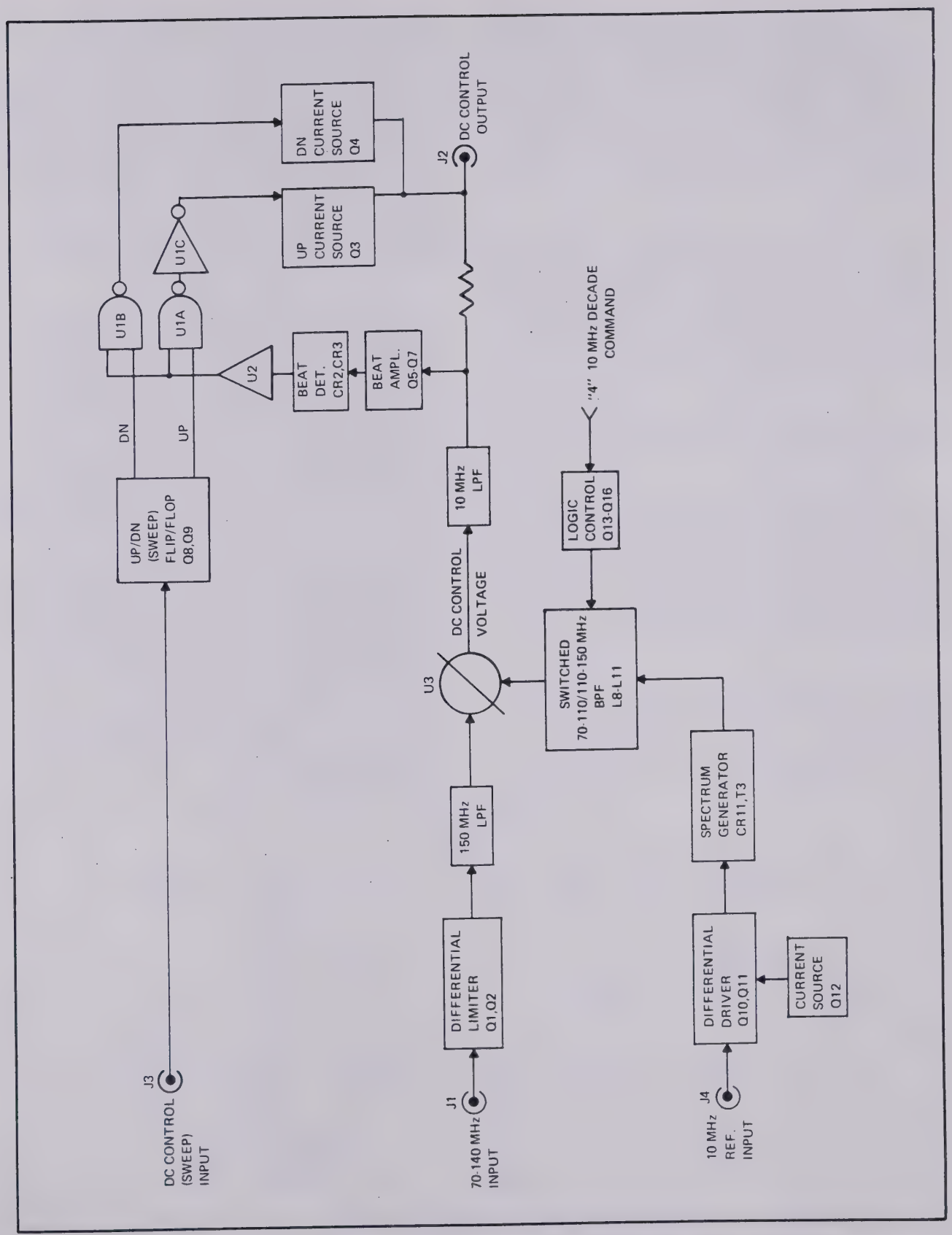

Figure 3-19. 10 MHz D.U. STEP LOOP P.D. MODULE BLOCK DIAGRAM (6160A-4106-1)

3-124. NAND gates U1A and U1B receive an enable command (+5V) from U2 whenever a beat signal is present at J2. This beat signal exists whenever there is a difference between the two inputs to phase detector U3. Ac amplifiers Q5 through Q7 amplify the beat signal, which is then peak detected by CR2 and CR3. The resulting positive voltage across C21 is converted to a +5V enable command by U2 and applied to NAND gates U1A and U1B.

3-125. When both inputs to U1A or U1B are high (positive), the low output switches on up or down current sources Q3 and Q4 and produces a positive or negative dc output at J2. Current source Q3 is switched on via inverter U1C when both inputs to U1A are positive (up sweep) and produces a positive voltage at J2. A negative voltage at J2 is provided via Q4 which is switched on by U1B (down sweep).

3-126. 10 MHz D.U. IF Mixer Module (6160A-4108)

3-127. The 10 MHz D.U. IF Mixer Module (Drawing No. 6160A-1008) combines the 80 to 160 MHz main loop and 70 to 140 MHz step loop signals of the 10 MHz digit section. The resulting 10 to 20 MHz difference is then used to phase-lock the main loop in the 10 MHz digit section. A block diagram of the circuitry is shown in Figure 3-20.

3-128. The 70 to 140 MHz step loop input to J2 is amplified by transistor Q3. The signal at tapped inductor T2 is coupled by C15 to a 140 MHz low-pass filter consisting of L5 through L9, C16, and C17. This filter removes any ripple above 140 MHz and applies the signal to pin 6 of mixer U1 where it functions as a linear input. An 80 to 160 MHz main loop input to J1 is translated to a symmetrical squarewave by tuned differential limiter Q1 and Q2. Positive going inputs to Q1 cause it to conduct the maximum current available through R1 and R2. Transistor Q2 is cut-off during this period and no signal is developed in its collector. When the input to Q1 goes negative, it is cut-off and Q2 conducts the maximum current available through R1 and R3. The resulting 80 to 160 MHz squarewave at T1 is filtered by C6 through C10, L1, and L2 to remove any ripple above 160 MHz. Capacitor C42 couples the filtered signal to pin 1 of mixer U1 where it functions as a switching input.

3-129. Mixer U1 combines the 70 to 140 MHz step loop and 80 to 160 MHz main loop signals. A 20 MHz low-pass filter consisting of C18 through C21, C26 through C28, and L14 through L16 selects the 10 to 20 MHz difference frequency. Driver Q4 amplifies the 10 to 20 MHz resultant which is then applied to Q5. FET Q6 functions as a vari-automatic amplitude control of the output signal from the emitter and collector of Q5. The collector signal of Q5 is applied to J4, via tapped inductor T3, while its emitter signal is applied to Q7 via R25 and C35. Driver Q7 amplifies the emitter output of Q5 which is then applied to buffer Q10 and amplitude detector CR1, CR2. Buffer Q10 produces a variable load at the output of Q7. This variable load provides 10 to 20 MHz output that is isolated from the amplitude detector to J3. Diodes CR1 and CR2 detect the amplitude of the collector signal from Q7 and provide a proportional dc input to Q8. Transistors Q8 and Q9 form a differential amplifier which amplifies any difference between the reference voltage set by R35 and the dc input from the amplitude detector. The difference output from Q9 drives FET Q6. Subsequently, the amplitude of the outputs at J3 and J4 are automatically controlled.

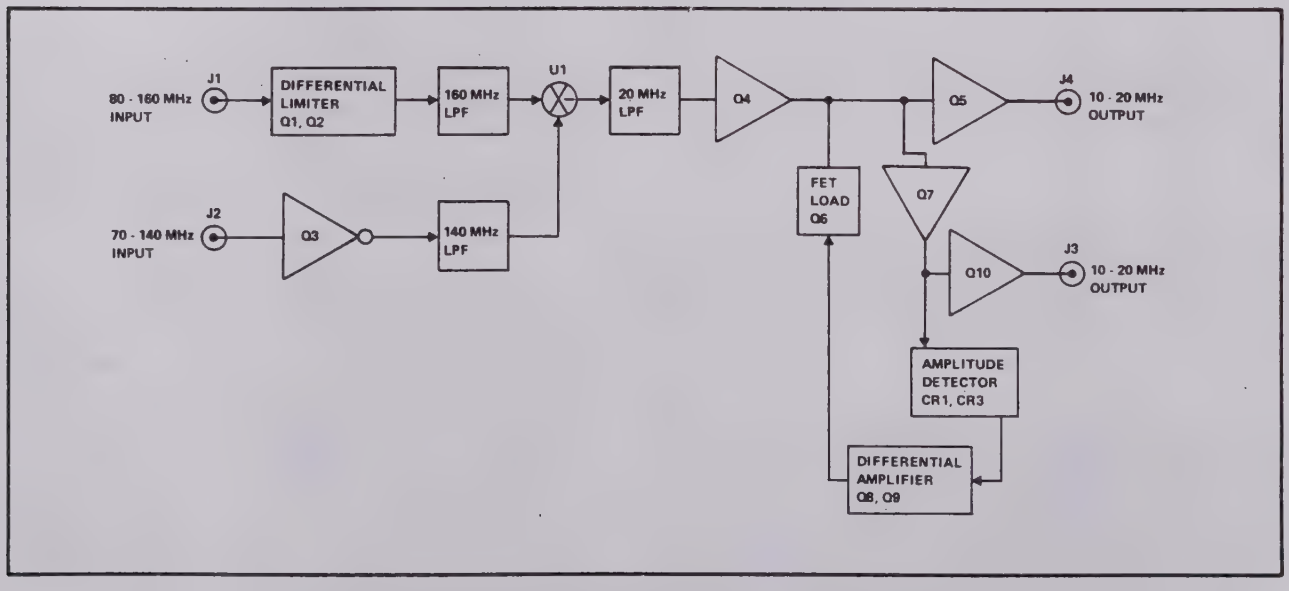

Figure 3-20. 10 MHz D.U. IF MIXER MODULE BLOCK DIAGRAM

3-130. 10 MHz D.U. Main P.D. Module (6160A-4109)

3-131. The 10 MHz D.U. Main P.D. Module (Drawing No. 6160A-1009) combines the 10 to 20 MHz output from the 1 MHz digit section with 10 to 20 MHz signals from the 10 MHz main loop. The resultant dc output then determines the frequency and phase of the 10 MHz main loop. A block diagram of the circuitry is shown in Figure 3-21.

3-132. The 10 to 20 MHz input from the 1 MHz digit section at J4 is translated to a symmetrical squarewave by differential limiter Q1 and Q2. Negative going inputs to Q1 cause it to conduct the maximum available current through R1. Transistor Q2 is cut-off during this period and no signal is developed in its collector. When the input to Q1 goes positive, it is cut-off and Q2 conducts the maximum current available through R1. The resulting 10 to 20 MHz squarewave at T1 is then coupled, via C7, to phase detector U1, where it functions as a switching input. Phase detector U1 receives a linear 10 to 20 MHz input from J3. This input is derived from the 10 MHz main loop. A low-pass filter consisting of C18 through C20 and L7 removes any ripple above 20 MHz.

3-133. Phase detector U1 combines the two 10 to 20 MHz inputs and produces an output that is the difference frequency. If both inputs are equal in frequency, the output is a dc voltage proportional to the cosine of the phase relationship between the two inputs. A low-pass filter consisting of C21, C22, C24, L8, and L9 removes any ripple above 7 MHz. The resulting difference frequency or dc voltage is applied, via R50, to J2. Presence of a dc voltage output from U1 (main loop phase-locked) causes FET gate Q19 to conduct which grounds the junction of R49 and R51. However, when the output of U1 exceeds 1 MHz, Q19 is cut-off and a dc voltage derived from the output of U2 is applied, via R49 and R51, to J2.

3-134. Amplifiers U3 through U5 control conduction of FET gate Q19 via AND gate CR15 through CR18. FET Q19 is conducting when the difference frequency output of U1 is less than 1 MHz. A difference frequency greater than 1 MHz turns off Q19 and makes available to J2 the dc output of U2 via R49 and R51. Beat note amplifier Q10 and Q11 amplify the difference frequency output of U1 which then initiates turn-off of Q19. The collector signal of Q11 is rectified by CR6 and CR7 to provide a positive dc input to U5. Operational amplifier U5 produces a positive output under this condition which turns off CR17. Sequential with this condition, U3 and U4 (to be described later) also produce positive outputs that turn off CR15 and CR16. With CR15 through CR17 off, CR19 conducts and the resulting voltage (0V) at the junction of CR18 and R48 turns off FET, Q19. The dc output from U2 is thus summed with the difference frequency output of U1 and made available to J2.

3-135. Comparison of the 1 MHz digit section signal (J4) and the 10 MHz main loop signal (J1 and J3) is done using

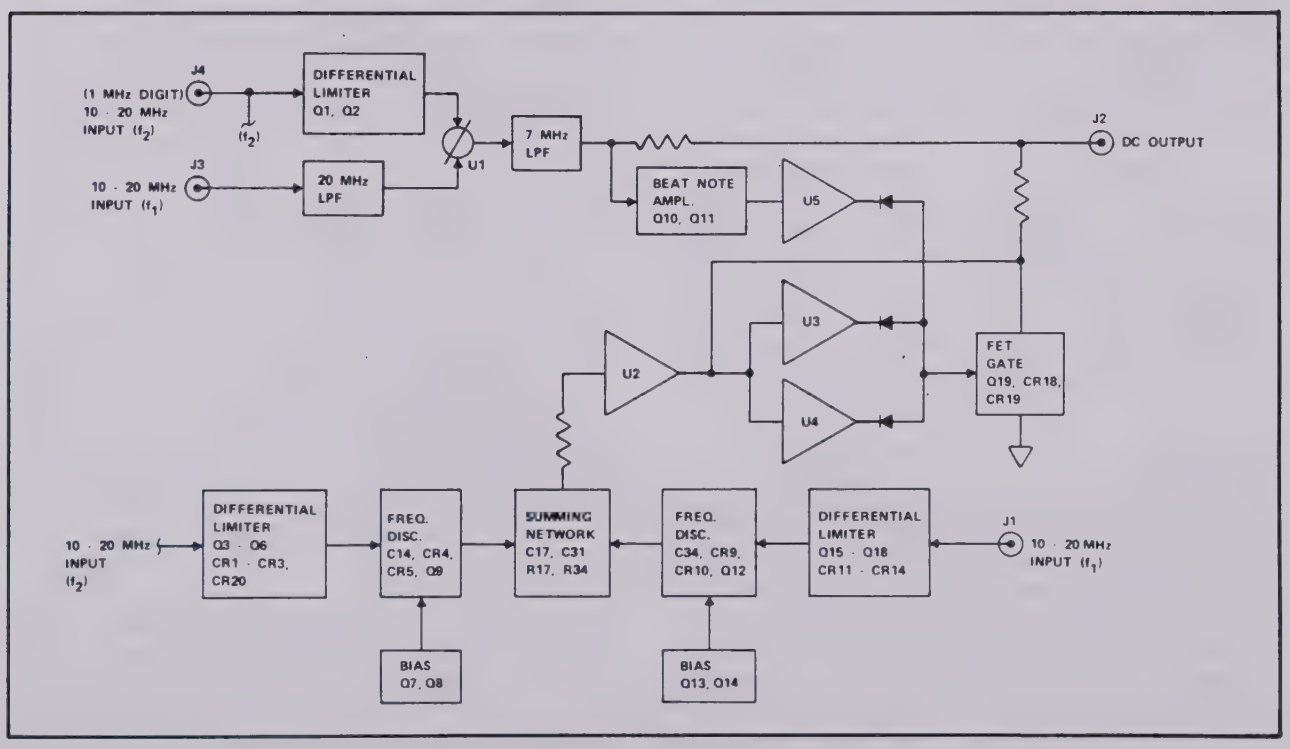

Figure 3-21. 10 MHz D.U. MAIN P.D. MODULE BLOCK DIAGRAM

two discriminators shown in the block diagram. The resulting difference is then summed and converted to a dc voltage proportional to the offset. This dc voltage is made available to J2 when any difference greater than 1 MHz exsits between the inputs of J1 or J4. Since both discriminators operate in an identical manner, only the one receiving an input from J4 is described. It should be noted that the input to J1 is identical, except for amplitude, with the input to J3.

3-136. The 10 to 20 MHz input to J4 is coupled via C9 to a differential limiter consisting of Q3 through Q6 and diodes CR1 through CR3 and CR20. Operation of Q3, Q4 and Q5, Q6 is similar to Q1 and Q2 described previously. Diodes CR2 and CR3 provide temperature compensated limiting of the output from Q3 and Q4. Sharp cut-off of Q3 and Q4 is provided via CR1 and CR20.

3-137. Discriminator CR4 and CR5 together with Q9 process the resulting squarewave signal coupled via C14 and produces a dc current proportional to the frequency. Temperature compensated bias is provided via Q7 and Q8. The resulting dc current from Q9 is then summed through R17 with the output of a similar discriminator, but of opposite polarity via R34. The resulting difference current is then amplified by U2 to produce a dc voltage proportional to the difference frequency between J1 and J4. This dc voltage is made available to J2 and also applied to U3 and U4. Comparator amplifiers U3 and U4 produce a turn off voltage to CR15 and CR16 (positive output) when the dc voltage is proportional to a difference frequency grater than 1 MHz. Since beat note amplifier Q10 and Q11 also causes CR17 to be cut-off via U5 at this time, FET gate Q19 described previously is cut-off. The dc output from U2 is thus summed with the output of U1 and made available at J2.

3-138. 10 MHz D.U. Main Loop VCO Module (6160A-4110)

3-139. The 10 MHz D.U. Main Loop VCO Module (Drawing No. 6160A-1010) produces an 80 to 160 MHz output containing the 10 MHz digit information. This signal is available in 10 MHz increments and corresponds to the 10 MHz decade commands. Any previous digit information is included, thus providing a total range in output from 80.000000 to 159.99999 MHz. A block diagram of the circuitry is shown in Figure 3-22.

3-140. The dc input to J1 together with the BCD 10 MHz decade commands applied to U4 produce a dc control voltage across C6 that determines the output frequency of an 80 to 160 MHz voltage controlled oscillator (VCO). Transistors Q1 and Q3 integrate the dc input at J1 and provide fine tuning of the VCO frequency. An up frequency charge current for C6 is provided by Q1. Down frequency charge current is provided by Q3. Temperature compensation for Q1 and Q3 is provided via diode connected Q2 and Q4. Variable resistor R3 allows adjustment of the VCO frequency for a given dc input to J1.

3-141. BCD 10 MHz decade applied to U4 produce an incremental step voltage across C6 via a presteering and limit stop circuit consisting of Q10 through Q15 and U1 through U3. The inverted 1-2-4 outputs from U4 (0V = true) turn off associated diodes CR9, CR11, and CR13. Transistors Q10 through Q12 then provide 1-2-4 weighted currents via R27, R28, and R29 to operational amplifier, U3. This weighted current input to U3 is then added to its output developed across R35 through R38. Differential Amplifiers U1 and U2 apply the resulting presteering current proportion-

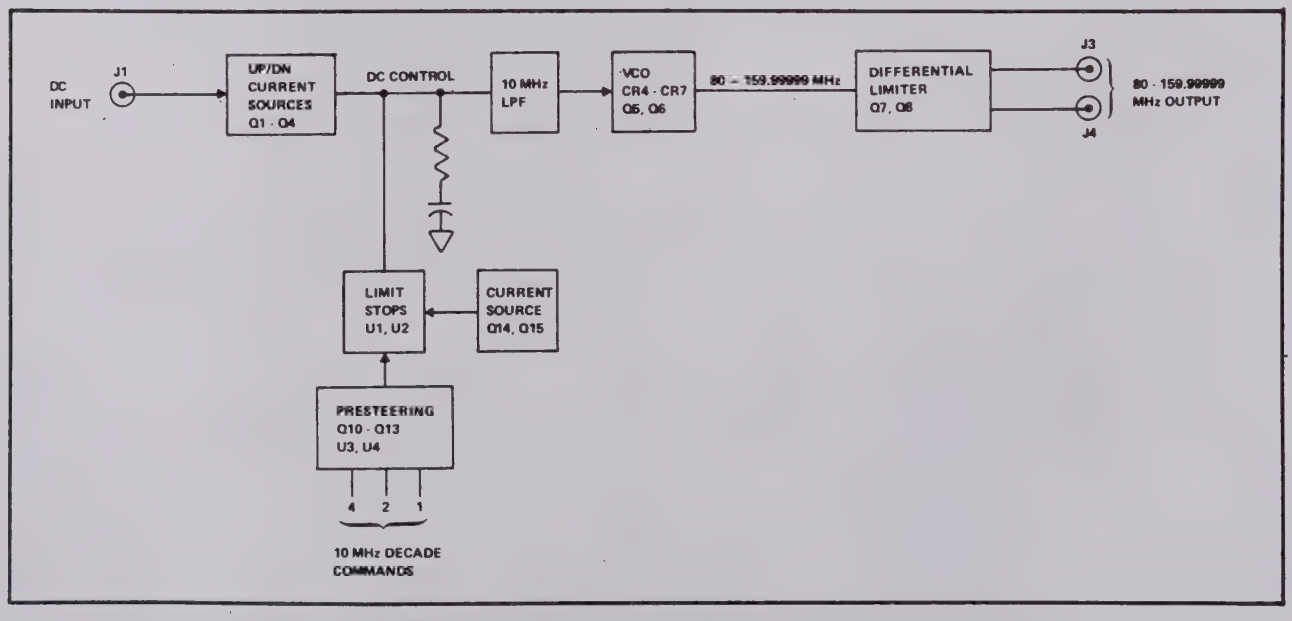

Figure 3-22. 10 MHz D.U. MAIN LOOP VCO MODULE BLOCK DIAGRAM

al to the 10 MHz decade commands to C6 via CR2 and CR3. Temperature compensation is provided by Q13. Transistors Q14 and Q15 provide a reference current input to U1 and U2, adjustable by R38. This current input establishes an upper limit stop for U1 and a lower limit stop for U2. Should the dc control voltage developed across C6 exceed the reference, U1 or U2 clamp the dc control voltage at the reference. Variable resistor R33 allows adjustment at the low end of the dc control voltage, while R36 adjusts the high end. The resulting dc control voltage is passed through a 10 MHz low-pass filter consisting of C8 through C11 and L5 to remove any ripple above 10 MHz and applied to a VCO.

3-142. The VCO consisting of CR4 through CR7, Q6, Q7 and a printed circuit inductor produces an 80 to 159.99999 MHz signal dependent upon the dc control voltage across C6. Capacitance value of varicaps CR4 through CR7 depends upon the applied dc control voltage. These varicaps together with the tapped printed circuit inductor form a tuned circuit. Conduction of Q6 developes a signal which is coupled via C14 to the tuned circuit. Regenerative feedback to the base of Q6 via R15 sustains oscillations at the resonant frequency of the tuned circuit. Grounding of the emitter of Q6 is provided via the emitter-base junction of Q5. Transistor Q5 also buffers the resulting VCO output which is coupled via L8 and C18 to Q7 and Q8.

3-143. Transistors Q7 and Q8 form a differential limiter which translates the VCO signal to a symmetrical square-wave. Positive going inputs to Q7 cause it to conduct the maximum available current supplied via R24 and R25. Transistor Q8 is cut-off during this period and no output is developed at its collector. When the input to Q7 goes negative, Q7 is cut-off and Q8 conducts the maximum available current supplied via R24 and R25. The resulting square-wave signals developed across tapped inductors L9 and L10 are applied to J3 and J4.

3-144. Output Divider Module (6160A-4111)

3-145. The Output Divider Module (Drawing No. 6160A-1011) produces the final 1 to 160 MHz output of the synthesizer. It receives an 80 to 160 MHz input, band and range commands, and a dc level control voltage. The band and range commands select the appropriate dividers and filters which then produce an output signal proportional to the preselected dial settings or remote input. Amplitude of this output signal is dependent upon the level of a dc level control voltage. A block diagram of the circuitry is shown in Figure 3-23.

3-146. BUFFER LIMITER. The 80 to 160 MHz input at J3 is amplified by Q2 and limited by CR15 and CR16. Amplifier Q2 has a high forward rf gain controlled by feedback through C10, R94 and L29. Capacitor C95 couples the amplified signal to limiter, CR15 and CR16. The limiting point of CR15 and CR16 is set by voltages across CR17 and CR18. Diode CR17 is biased by R110 to +5V, while CR18 is self-biased to ground. The resulting limited 80 to 160 MHz signal is coupled through C124 to the 110 to 160 MHz and 80 to 110 MHz gates. It is also coupled through C94 to a 2/1 divider, U8.

3-147. RANGE AND BAND LOGIC. The range and band logic consists of NAND gates U1, U2, U9 and inverters Q1, Q3. This circuitry activates the appropriate dividers and filter/gates depending on range and band logic inputs. The range command is applied to U1 and Q1. It is a 0V command when the 1 - 12 MHz range is selected. When the 10 - 160 range is selected, this input is a +5V command. Band commands applied to U1A through U1D, U2A through U2D, and U9A, U9C correspond to the preselected output in the most significant decade (1 MHz or 10 MHz). A "1" in this decade produces the 1-2 band command; a "2" or "3" the 2-4 band command; a "4, 5, 6", or "7" the 4-8 band command; an "8" or above produces the 8-16 band command. The 80 - 110 band command is produced only in the 10-160 MHz range when an 8 to 10 exists in the 10 MHz decade.

3-148. Presence of a 10 - 160 MHz range command (+5V) will enable NAND gates U1A through U1D. Inverter Q1 conducts with this command present at its base and produces a 0V collector signal which disables NAND gates U2A through U2D. Transistor Q3 is switched on by conduction of Q1 and provides a +5V disable command to OR/NOR gate U7B. This disable command causes U7B to block the input signal to 5/1 divider U5B and U6. In the 1 - 12 MHz range, a 0V command is applied to the base of Q1. Subsequently, NAND gates U1A through U1D are disabled and Q1 is switched off. The resulting +5V collector signal of Q1 then enables NAND gates U2A through U2D. Transistor Q3 is switched off in conjunction with Q1 and enables OR/NOR gate U7B, which then passes the input signal to 5/1 divider U5B and U6.

3-149. Disabling of dividers not required to produce the preselected output is done in most cases by applying a +5V signal to the K or C_1 input of the divider. The only exception to this is the 5/1 divider U5B and U6 described previously and the 2/1 divider U10B. The input to U10B is blocked by OR/NOR gate U7A which receives a +5V input at pin 4 via R33.

3-150. Each divider is enabled by a 0V input applied to K or C_1 inputs. Divider U4A is enabled directly by a 0V output from U2A. Diodes CR1 and CR4 also enable dividers U4B and U5A in conjunction with U4A. Dividers U4B and U5A are separately enabled via CR2 and CR3 by a 0V output from U2B and U2C, respectively. The 0V output from U1A enables divider U10A directly. Diode CR5 enables divider U10B via OR/NOR gate U7A in conjunction with divider U10A. OR/NOR gate U7A is enabled separately via CR6 by a 0V output from U1B. Divider U8 is enabled by a 0V output of inverter U9D.

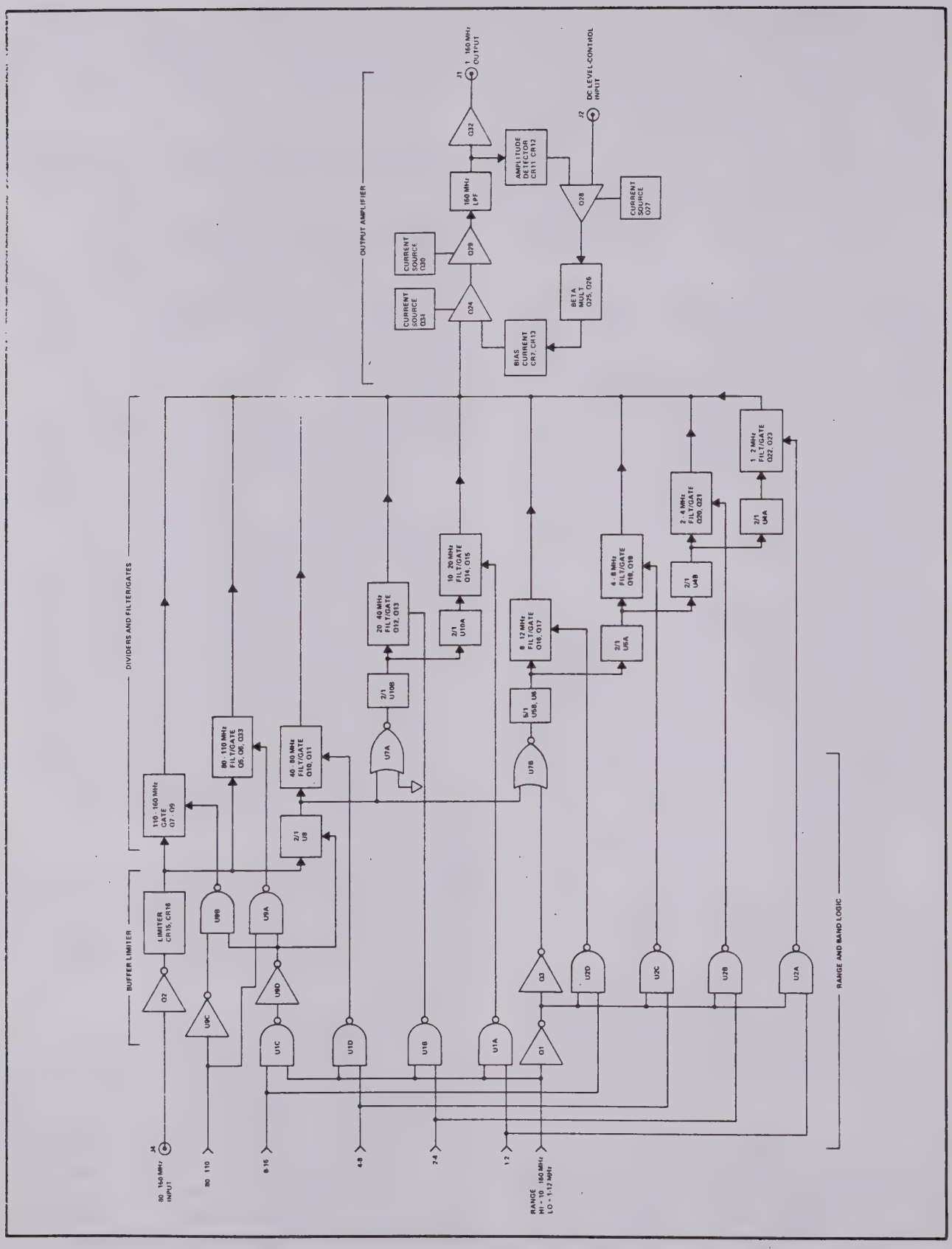

Figure 5-23. OUTPUT DIVIDER MODULE BLOCK DIAGRAM

3-151. Band logic inputs to U1 and U2, in conjunction with the range command described previously, produce 0V outputs which also activate the associated 1 - 2 MHz through 40 - 80 MHz filter/gates. The 80 - 110 filter/gate and 110 - 160 MHz filter/gate are activated via the combined action of U1C and U9. Presence of the 8-16 band command in the 10 - 160 MHz range produces a 0V output at pin 8 of U1C. The output of U1C is inverted by U9D and the resulting +5V signal applied to pin 2 of U9A, pin 4 of U9B, and pin 6 of U8. This signal is present at all times in the 10 - 160 MHz range. It functions as an enable input to NAND gates U9A and U9B and as a disable command for divider U8. Presence of an 80 - 110 band command provides a +5V input to pin 1 of U9A and pin 9 of inverter U9C. NAND gate U9A produces a 0V output which enables the 80 - 110 MHz filter/gate. The 110 - 160 MHz filter/gate is disabled by the corresponding +5V output of NAND gate U9B, which receives a 0V input at pin 5 via inverter U9C. If the 80 - 110 band command is not present, inverter U9C provides a +5V input to pin 5 of U9B. NAND gate U9B then produces a 0V output which enables the 110 - 160 MHz filter/gate. The 80 - 110 MHz filter/gate is disabled by the 5V output of NAND gate U9A.

3-152. DIVIDERS. There are seven series connected dividers in this module. Individual or group activation is done by appropriate range and band logic inputs, such that the 80 - 160 MHz input is divided down to yield the preselected output. Emitter-coupled logic is standard to provide a typical output signal swing of 0.8V. A high output is approximately +4.3V and a low +3.4V.

3-153. The limited 80 to 160 MHz signal coupled through C94 is divided down to 40 to 80 MHz by 2/1 divider U8. This divider is enabled by a 0V input to pin 6 from U9D. A +5V input to pin 6 disables its operation. Voltage divider CR19, R16 and R17 provide proper bias at the pin 8 clock input. The resulting divided down 40 to 80 MHz outputs at pins 2 and 3 are coupled through C25 and C26 and applied to T3 via R18 and R19. Transformer T3 couples the signal to the following 40 to 80 MHz filter/gates. The divider output is also applied to OR/NOR gates U7A, U7B.

3-154. OR/NOR gate U7A is enabled by a 0V input to pin 4. When enabled, it applies the 40 to 80 MHz signal from U8 to pin 12 of 2/1 divider U10B. The resulting 20 to 40 MHz outputs at pins 9 and 15 are applied to T4 via R31 and R32. Transformer T4 couples the signal to the following 20 to 40 MHz filter/gate. The divider output at pin 9 is also applied to 2/1 divider U10A.

3-155. Divider U10A is enabled by a 0V input to pin 3. When enabled, it divides the 20 to 40 MHz input at pin 4 down to a 10 to 20 MHz signal available at pins 1 and 7. The 10 to 20 MHz output is applied to T5 via R30 and R54 and coupled to the following 10 to 20 MHz filter/gate.

3-156. OR/NOR gate U7B passes the 40 to 80 MHz output of U8 when a 0V input is applied to pin 10. The 5/1 divider consisting U5B, U6A and U6B divides the input down and produces an 8 to 16 MHz signal at pin 13 of U6B and pin 9 of U5B. The output at pin 2 of U6A is applied directly to the following 8 to 12 MHz filter/gate. The output at pin 9 of U5B is applied to 2/1 divider U5A.

3-157. Divider U5A is enabled by a 0V input to pin 3. When enabled, it divides down the 8 - 16 MHz input applied to pin 4 and produces a 4 to 8 MHz signal at pins 1 and 7. The 4 to 8 MHz output is applied to T6 via R27 and R28 and coupled to the following 4 to 8 MHz filter/gate. The divider output at pin 7 is also applied to 2/1 divider U4B.

3-158. Divider U4B is enabled by a 0V input to pin 13. When enabled, it divides down the 4 to 8 MHz input applied to pin 12 and produces a 2 to 4 MHz signal at pins 9 and 15. The 2 to 4 MHz output is applied to T7 via R25 and R26 and coupled to the following 2 to 4 MHz filter/gate. The divider output at pin 15 is also applied to 2/1 divider U4A.

3-159. Divider U4A is enabled by a 0V input to pin 3. When enabled, it divides down the 2 to 4 MHz input applied to pin 4 and produces a 1 to 2 MHz signal at pins 1 and 7. The 1 to 2 MHz output is applied to T8 via R23 and R24 and coupled to the following 1 to 2 MHz filter/gate.

3-160. FILTER/GATES. The filter/gates pass or reject the 80 to 160 MHz input and the divider outputs depending on the range and band logic commands. The resulting filtered output of the activated filter/gate corresponds to the preselected frequency of the synthesizer.

3-161. Two types of filter/gates are used to pass the desired frequency: two transistor and three transistor. The two transistor filter/gates are used to pass or reject frequencies below 80 MHz. Frequencies above 80 MHz are passed or rejected by three transistor filter/gates. Since operation of each two transistor gate, except for 8 to 12 MHz filter/gate Q16, Q17, and three transistor filter/gates is similar, only one of each type is described.

3-162. The two transistor 40 to 80 MHz filter/gate of Q10 and Q11 is activated by a 0V input to the base of Q10 via R39. Presence of this 0V input turns on Q10 and Q11 by providing a dc current path from +5V via R40, Q11, L4, L3, Q10 and R39 to the 0V output at pin 11 of U1D. Each transistor will saturate since their collector circuits are at a high impedance with no dc current path. The saturated transistors appear as a low impedance path to the 40 to 80 MHz signal coupled via T3, R103 and C27 to the collector of Q10. An 80 MHz low-pass filter consisting of C111 (traps C112, L3 and C43) L4, C29, and C30 rejects

signal components above 80 MHz that are passed by Q10 and Q11. The filtered output is coupled by C106 to the output amplifier. Presence of a +5V output from U1D bias Q10 and Q11 off by disabling the base/emitter current path. The resulting high impedance collector/emitter path then prevents passage of the 40 to 80 MHz signal.

3-163. Filter/gate Q16 and Q17 operates in a manner similar to Q10 and Q11. Transistor Q16 is connected as an emitter-follower, and Q17 receives the turn on/off bias. Presence of a 0V input to the base of Q17 via R47 provides a dc current path from +5V via L36, Q16, R112, L9, L10, Q17 and R47. This dc current switches on Q16 and Q17 which then pass the 8 to 12 MHz signal to the output amplifier. The 12 MHz low-pass filter consisting of C109 (traps C110, L9 and C47) L10, and C48 rejects signal components above 12 MHz.

3-164. The three transistor 110 to 160 MHz filter/gate of Q7 through Q9 is activated by a 0V input to the base of Q8 via R37. Presence of this 0V input turns on Q7 through Q9 by providing a dc current path from +5V via R36, R38 and Q7, Q9, Q8, and R37 to the 0V output at pin 6 of U9B. Transistors Q7, Q9 and Q8 will saturate since their collector circuits are at a high impedance with no dc current path. The saturated transistors appear as a low impedance path to the 110 to 160 MHz input signal coupled by C21 to the collector of Q7. The signal passed by Q7 through Q9 is coupled via C108 to the output amplifier. Filtering for 110 to 160 MHz signals is done in the output amplifier.

3-165. OUTPUT AMPLIFIER. The output amplifier produces the final 1 to 160 MHz output having a level of +3 to +13 dBm into 50 ohms. Output amplitude is controlled by a dc control voltage. Transistor Q24 has a variable gain controlled by Q25, Q26 and Q28. Fixed gain is provided by Q29 and Q32. Transistors Q34, Q30 and Q31 provide a fixed dc current for Q24, Q29 and Q32 respectively.

3-166. The 1 to 160 MHz signal is first amplified by variable gain amplifier Q24. Negative feedback through L18, R58 and C68 provides gain flatness over the entire frequency range. A constant dc current through Q24 is provided by Q34 which maintains a constant voltage across R60. Variable gain is controlled by CR7 and CR13 which act as current variable resistors. These diodes are controlled by Q25, Q26 described later. The amplified collector or signal of Q24 is coupled through C73 and further amplified by fixed gain amplifier Q29. A constant dc current through Q29 is provided by Q30 which maintains a constant voltage across R73. Negative feedback through L20, R69 and C75 provides gain flatness. Capacitor C82 couples the amplified output from Q29 to the 160 MHz low-pass filter composed of C87 through C90, L24 and C77. This filter rejects signal components above 160 MHz. The resulting filtered signal is then amplified by Q32 and applied to J1. Constant dc current through Q32 is provided by Q31 which maintains a constant voltage across R86. Negative feedback through R90, R92 and C84 provides gain flatness.

3-167. The filtered output signal is also coupled via R82 and C81 to amplitude detector CR11 and CR12. The detector output developed across C80 is a dc voltage proportional to the amplitude of the rf output. This dc voltage is applied to one input of differential amplifier Q28 which receives a variable dc control at its other input from J2. The variable dc control voltage is derived from the front panel LEVEL control or an external source via the rear panel. Differential amplifier Q28 compares its two inputs and produces a difference output which is applied to Q26. Transistor Q27 provides a constant current for Q28. The difference output from Q28 is amplified by Q26 and Q25 which control the gain of Q24. Any difference in the detected output level and the dc control voltage subsequently alters the gain of Q24 until both inputs to Q28 are equal. As a result, the output level is maintained to nominally ±1 db of the preset level over the 1 to 160 MHz range.

3-168. Computer Assembly (6160A-4012)

3-169. The Computer Assembly (Drawing No. 6160A-1012) receives manual or remote synthesizer frequency control commands and converts them to internal frequency control commands. A block diagram of the circuitry is shown in Figure 3-24.

3-170. Manual commands from the front panel switches are introduced through J3 and J4. Selection of local command is accomplished by disconnecting power to gates U1 through U5 and grounding the common frequency selector switch bus on the front panel. This is accomplished by setting the front panel FUNCTION switch to the 1- 12 MHz or 10 - 160 MHz position.

3-171. Remote commands arrive through J16. Setting the front panel FUNCTION switch to REMOTE applies power to gates U1 through U5. The common frequency selector bus on the front panel is ungrounded, thereby preventing the outputs of gates U1 through U5 from being pulled low (0V) through the front panel switches. Resistors R1 through R31 provide multiplexer input current when the multiplexer inputs are in a high (+5V) state. U36 combines the BCD bits of the 10 MHz decade within the 1 bit of the 100 MHz decade to provide a binary coded 10 MHz digit with legitimate states of 1 through 15. Inverters U6C and U6F control the remote range. The outputs of gates U1 through U5C are applied to the 1, 2, 4, and 8 multiplexers U9 through U12. The output of gates U5D, U5E, U6A and U6B is applied to the band logic circuitry.

3-172. BAND LOGIC. The Band Logic circuitry consists of inverters U7A through U7F and NAND gates U8A through

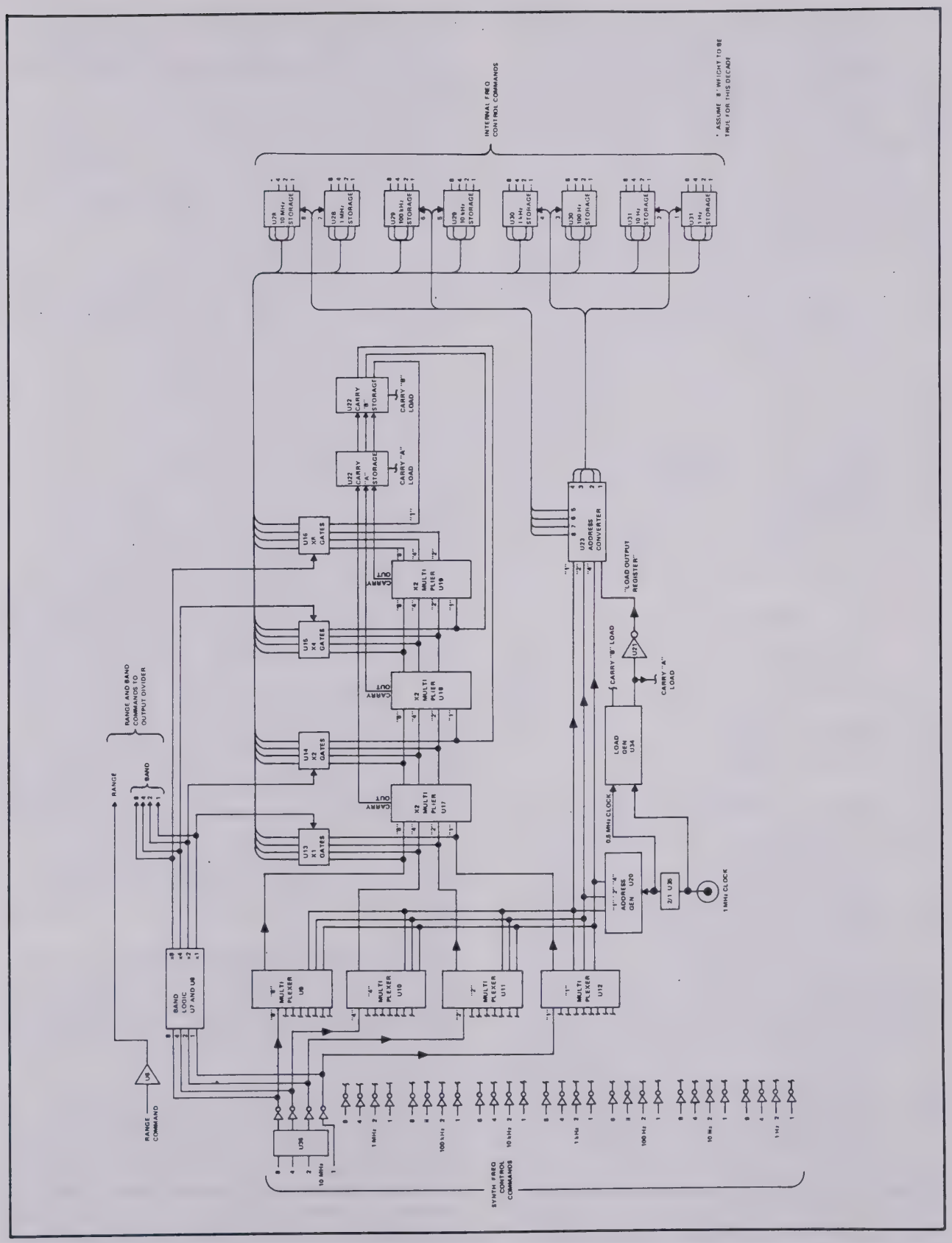

Figure 3-24. COMPUTER ASSEMBLY BLOCK DIAGRAM

U8C and U33A through U33C. The band logic decodes the 10 MHz digit information and selects the appropriate x1, x2, x4, or x8 gates. NAND gate U8A and inverter U7F decode the 1 - 2 band command. NAND gate U8B and inverters U7A and U7B decode the 2 - 4 band command. NAND gate U8C and inverters U7B and U7D decode the 4 - 8 band command. Inverter U7C supplies the 8 - 16 band command. The logic at inverters U7C through U7F is also applied to the x1, x2, x4, and x8 gates.

3-173. CLOCK AND LOAD GENERATOR. The Clock and Load Generator circuitry consists of NAND gates U35A, U35C, U35D, NOR gates U21A through D, and load generator U34. A 1 MHz clock signal is applied to NAND gate U35D. After dual inversion by NAND gates U35D and U35A, the signal is applied to a binary circuit within U20. The output of this binary circuit, pin 1, is then applied to the load generator U34 and NAND gates U21C and U21D. The load generator is also driven by the 1 MHz output of NAND gate U35C. The outputs of U20 and U34 are gated together with NAND gates U25A, U25C and U25D to produce 4 discrete phases of the 500 kHz clock. Figure 3-25 shows the waveshapes of this circuitry.

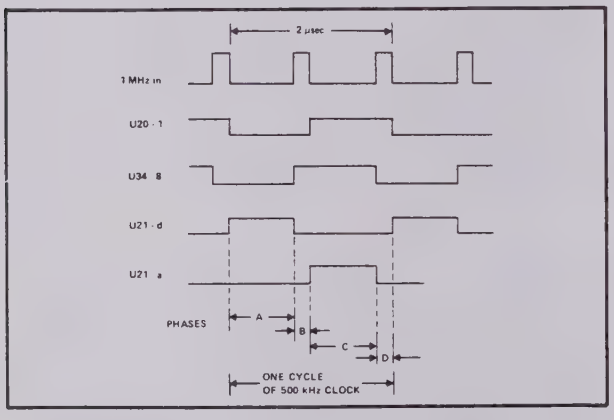

Figure 3-25. CLOCK AND LOAD GENERATOR WAVESHAPES

3-174. MULTIPLEXERS. The Multiplexer circuitry sequentially presents decade bit information of the 1, 10, 100 Hz, kHz, and 1 and 10 MHz decades to the x2, Multiplier and x1 gate circuitry. The multiplexing is done under command of the address generator U20. The multiplexer circuitry consists of multiplexers U9 through U12. U9 is the "8" multiplexer, U10 the "4" multiplexer, while U11 is the "2" multiplexer and U12 the "1" multiplexer.

3-175. X2 MULTIPLIERS. The X2 Multiplier circuitry consists of U17, U18 and U19. The first x2 Multiplier, U17, receives the serial input from multiplexers U9 through U12 and multiplies that input by a factory of two. The second multiplier U18 multiplies the output of the first multiplier by a factor of two, thereby achieving a total multiplication of four. U19, the third multiplier multiplies the output of the second multiplier by a factory of two, thereby achieving a total multiplication of eight. The 2, 4, and 8 output lines of the multipliers command the x2, x4, and x8 gates while the 1 line is fed to the Carry Storage Circuit U22. Table 3-1 shows input/output logic for any given multiplier.

Table 3-1. X2 MULTIPLIER INPUT/OUTPUT LOGIC

COM-MAND	INPUT		OUTPUT
	1 2 4 8	BIT	2 4 8
	1 16 15 10	PIN	*3 5 4 4
0	0 0 0 0		0 0 0 0
1	1 0 0 0		0 1 0 0
2	0 1 0 0		0 0 1 0
3	1 1 0 0		0 1 1 0
4	0 0 1 0		0 0 0 1
5	1 0 1 0		1 0 0 0
6	0 1 1 0		1 1 0 0
7	1 1 1 0		1 0 1 0
8	0 0 0 1		1 1 1 0
9	1 0 0 1		1 0 0 1
* Carry Output			

3-176. X1, X2, X4, X8 GATES. The Multiplier Gates, NAND gates U13A through U16D, select the desired multiplier output (x1, x2, x4 or x8) to be loaded into the storage circuitry. Selection of the appropriate gate is accomplished by command signals from the band logic circuitry. Inverters U25C through U25F invert the selected gate output and applies the time multiplexed commands to the input of the storage registers U28 through U31.

3-177. CARRY STORAGE. The Carry Storage Circuitry, U22, is broken into two separate functions labeled carry storage A and carry storage B. During phase C of the clock period, carry storage A is loaded to store any multiplier carry outputs. At phase A of the following 500 kHz clock cycle, the contents of carry storage A is transfered into carry storage B to become the 1 bit input to th succeeding multiplier. NAND gates U33A, U33C and U33D supply overriding commands to the 1, 2, and 4 multiplexers to prevent carry bits from being transfered from the 10 MHz decade to the 1 Hz decade at the end of each sweep through the decades.

3-178. ADDRESS CONVERTER. The Address Converter, U23, converts the 3 bit address code generated by the address generator, U20, into 8 discrete outputs. Inverters U24A through F and U25A and B invert the outputs of U20 and sequentially command the proper storage register for loading.

3-179. STORAGE REGISTER. The Storage Register circuitry consists of U28 through U31, each being a dual quad latch. Storage information is received through the x1, x2, x4, and x8 gates. The proper storage register to be loaded is commanded by the address converter. The output lines of the storage registers are applied to either J5 or J7. NAND gates U32A through U32D generate the 80-110 command utilized in the Output Divider Module (6160A4111).

Section 4
Maintenance

4-1. INTRODUCTION

4-2. This section contains information and instructions concerning preventive and corrective maintenance for the Model 6160A Frequency Synthesizer. The information and instructions are arranged under headings of "SERVICE INFORMATION, MAINTENANCE ACCESS, GENERAL MAINTENANCE, ALIGNMENT PROCEDURE, and TROUBLESHOOTING."

4-3. A list of test equipment required to service the synthesizer is contained in Table 4-1. If the recommended equipment is not available, other equipment having equivalent specifications may be used.

4-4. SERVICE INFORMATION

4-5. Each synthesizer that is manufactured by the John Fluke Mfg. Co., Inc. is warranted for a period of one year upon delivery to the original purchaser. The WARRANTY is located at the front of the manual.

4-6. Factory authorized calibration and service for each Fluke product is available at various world-wide locations. A complete list of these authorized service centers is located at the rear of the manual. Shipping information is given in Section 2, paragraph 2-3. If requested, an estimate will be provided to the customer before any repair work is begun on instruments that are beyond the warranty period.

Table 4-1. REQUIRED TEST EQUIPMENT

EQUIPMENT NOMENCLATURE	RECOMMENDED EQUIPMENT
Frequency Counter	Fluke Model 1952A-079
RF Voltmeter	H. P. 411 H. P. 400D
Oscilloscope	Tektronix Model 454
Spectrum Analyzer	H.P. Model 8551B/851B
Loads	50Ω, 82k, 12Ω @ 12w, 14Ω @ 14w, 2.2k, 1.67Ω @ 15w, 12k, 6.8k, 1k, 33k, 39k, 3M, 3.3M, 130Ω
Digital Voltmeter	John Fluke Model 8200A
Sweep Analyzer:	
Oscilloscope	Alfred Model 8000
Analyzer	Alfred Model 7051
Crystal Detector	Alfred Model 1403
Sweep Generator	Texscan Model V5-80
DC Voltage Calibrator	Fluke Model 332B
Power Supplies:	
+5V dc, +14V dc, −12V dc	Harrison Lab, Model 865B Acopian Model LL
120 dB, 10 dB Step Attenuator	H. P. 3550
Signal Generators:	
50 kHz - 65 MHz	H. P. Model 606
10 MHz - 480 MHz	H. P. Model 608C (2)
Splitter, 6 dB	Three 50 ohm resistors in delta configuration
TTL to 50 ohm Isolator	0.05 μf capacitor in series with 270 ohm resistor
Multimeter	Simpson 260

4-7. MAINTENANCE ACCESS

4-8. Major Section Access

4-9. To gain access to the major sections of the synthesizer, proceed as follows:

a. Turn off the synthesizer and disconnect the power cord.

b. Set the synthesizer on its left side.

NOTE!

If the synthesizer is rack mounted, slide it out until the chassis slides lock in the extended position.

c. Remove the top and bottom dust covers. Access is now provided to the modules shown in Figure 4-1.

d. Remove the output divider. Access is now provided to plug-in assemblies as shown in Figure 4-2.

4-10. Module Removal

4-11. To remove a module, proceed as follows:

a. Disconnect any cabling and wiring and then remove the screws which hold the module in place.

NOTE!

Record cable and connector numbers and wiring color codes before disconnecting from module.

4-12. Plug-in Printed Circuit Card Removal

4-13. To remove the plug-in printed circuit assemblies, proceed as follows:

a. Remove plug-in boards by using a constant lifting force accompanied by a gentle rocking motion.

NOTE!

There are only two plug-in printed circuit cards that are removed for servicing: the power supply regulator and resolution extender. These assem blies are accessible after removing the output divider module. A riser card for servicing is installed between the assemblies.

4-14. Hinged Printed Circuit Assembly Access

4-15. To service the hinged printed circuit assemblies, proceed as follows:

a. Remove screws which hold the assembly in place.

b. Lift the assembly away from the synthesizer until the hinge locking bracket snaps in the locked or extended position.

4-16. Front Panel PCB Access

4-17. To service the front panel printed circuit assembly, proceed as follows:

a. Disconnect cabling from front panel printed circuit assembly to computer board at the computer board.

b. Remove decals from corner handle sides.

c. Remove four (4) screws from each corner handle side.

d. Disconnect RF OUTPUT cable from inside connection.

e. Pull front panel assembly away from chassis.

f. Remove knobs from front panel.

g. Disconnect indicator leads from front panel printed circuit assembly.

h. Remove five (5) mounting nuts from the rear of the front panel PCB assembly.

i. Pull front panel away from front panel PCB assembly. (Switch mounting bracket will remain with PCB).

j. Remove switch mounting nuts from front of switch mounting bracket and separate bracket from PCB. Access is now gained to service the switch assembly.

4-18. GENERAL MAINTENANCE

4-19. Cleaning

4-20. Clean the instrument periodically to remove dust, grease, and other contamination. Use the following procedure:

a. Clean the interior with clean, dry air at low pressure. When the printed circuit boards require cleaning, first spray them with Freon T.F. Degreaser (Miller Stephensen Company, Inc.) and then remove the dirt with clean, dry air at low pressure.

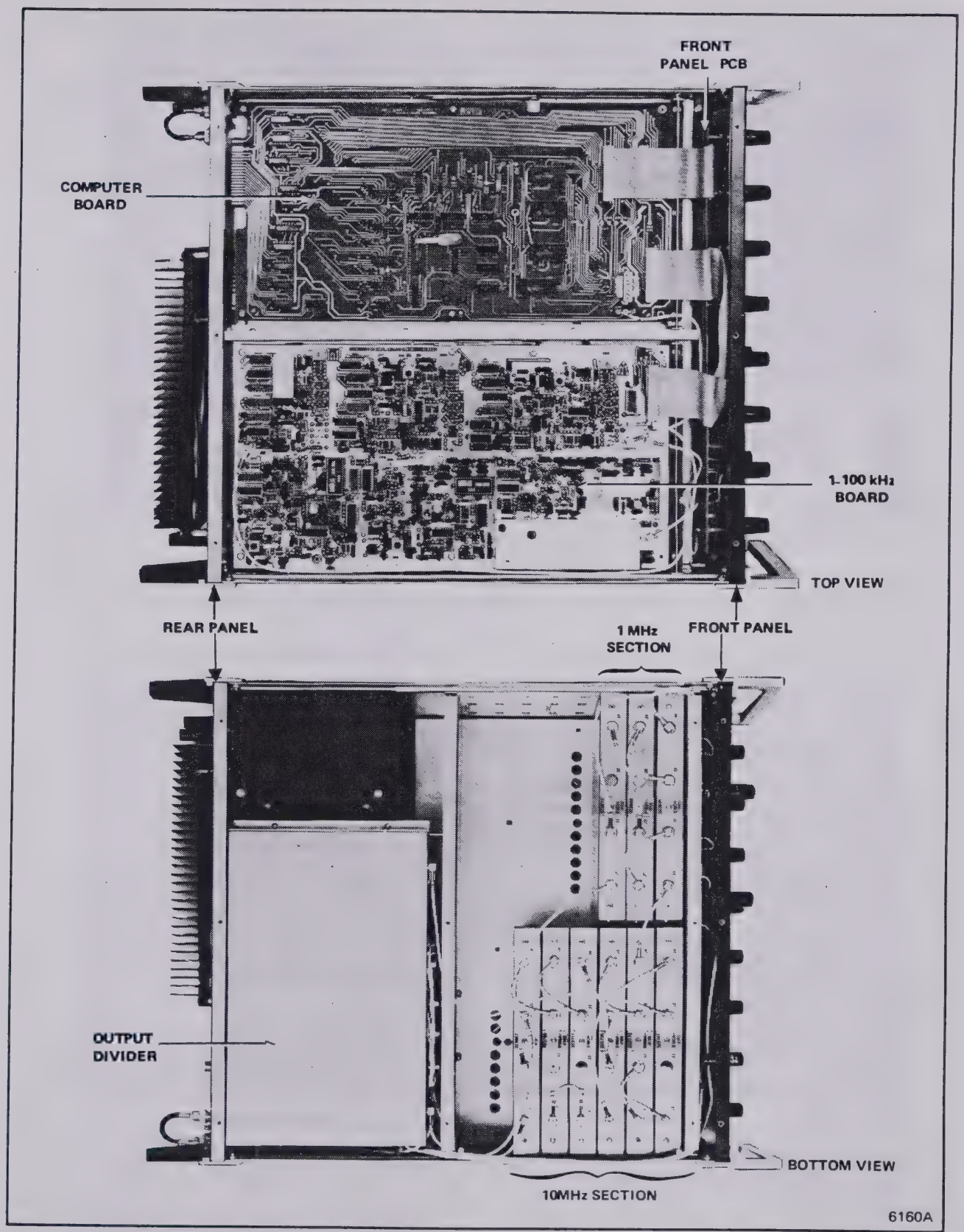

Figure 4-1. SECTION LOCATIONS

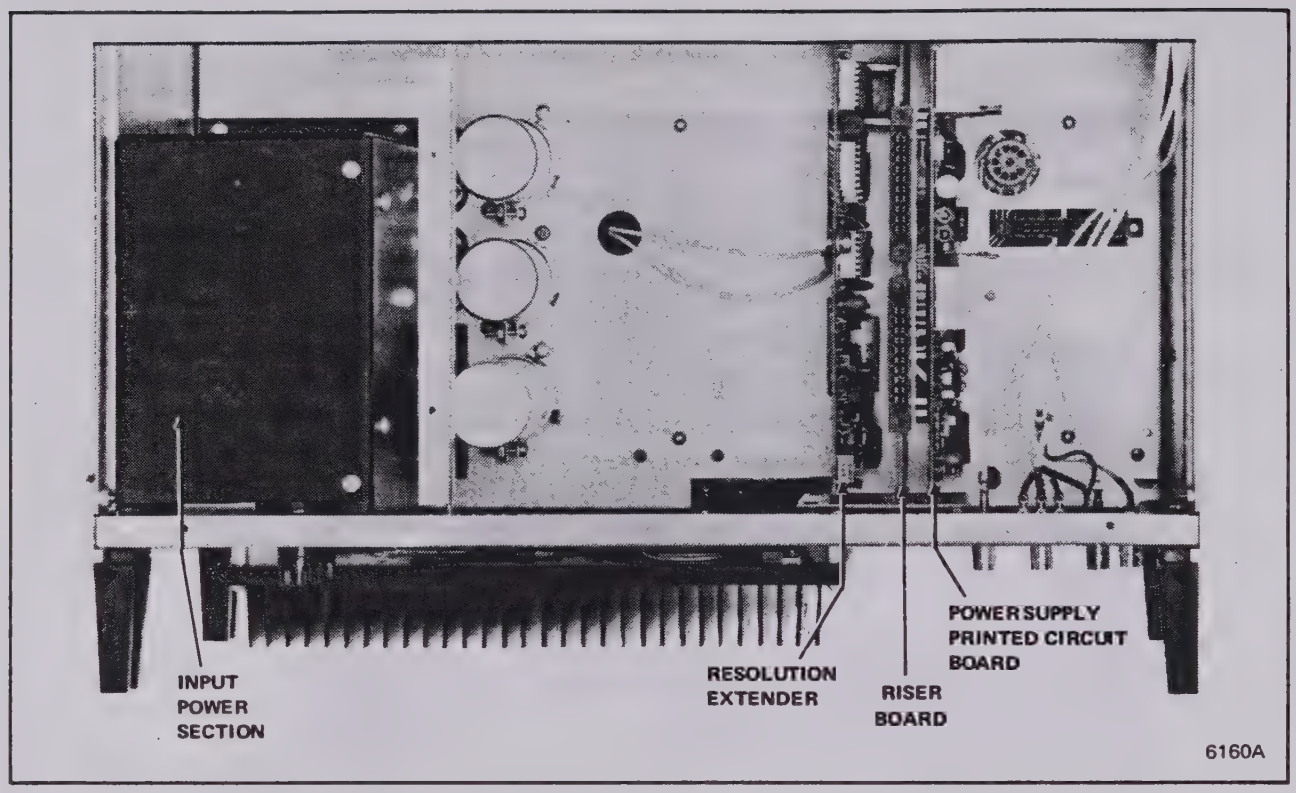

Figure 4-2. SECTION LOCATIONS, BOTTOM VIEW, DIVIDER MODULE REMOVED

b. Clean the front panel and exterior surfaces with anhydrous ethyl alcohol or a soft cloth dampened in a mild solution of detergent and water.

4-21. Fuse Replacement

4-22. There are two fuses located in bayonet fuseholders on the rear panel. These fuses protect the ac power circuitry from overloads. When replacing these fuses, use 1.5A Slo-Blo for 115Vac line power.

4-23. Lamp Replacement

4-24. The decimal, POWER, and INVALID FREQuency indicators are located on the front panel and can be removed without any special tools. To remove these indicators, proceed as follows:

a. Remove top and bottom covers.

b. Disconnect leads from defective indicator to switch pcb.

c. Push bushing and defective indicator out of front panel by applying pressure from inside the front panel.

d. Remove thermofit sleeving and desolder connections from indicator to connector leads.

e. Replace defective indicator with Fairchild VLV102, John Fluke Part No. 309617.

f. Install indicator using the preceeding procedure in reverse.

4-25. ALIGNMENT PROCEDURE

4-26. Introduction

4-27. The Model 6160A was completely aligned and tested before leaving the factory. It should not require realignment unless corrective maintenance is performed. Realignment or testing is then necessary only on the module or modules which have been repaired.

4-28. Test equipment required to align or test the modules is listed at the beginning of each procedure. A composite listing of recommended test equipment is listed in Table 4-1. Adjustment and test point locations are shown in illustrations included with each procedure.

NOTE!

A service kit (6160A-7006), JF part number 339002, is available for use in alignment or troubleshooting the Model 6160A.

4-29. Alignment or Test Signals

4-30. Module alignment or testing requires input power of +5, +14, and −12Vdc, in addition to specific rf signals. These inputs can be obtained from the test equipment listed in Table 4-1 or directly from the synthesizer.

4-31. Input Filter (6160A-4101)

4-32. This module is removed from the synthesizer and aligned with the following equipment:

a. Power Supply (+5V, +14V and −12V)
b. Oscilloscope
c. RF Voltmeter
d. 50 ohm load
e. Signal Generator

4-33. Figure 4-3 shows adjustment, test point, and input/output connector locations on the Input Filter module. Alignment is as follows:

a. Remove the cover from the module.

b. Apply dc voltages (+5V, +14V, −12V) to appropriate feed-thru connectors on the module. Connect power supply common to the module chassis.

c. Apply a 5MHz signal having a level of +7dBm to J1.

d. Connect the input of an oscilloscope (probe) to TP1 and its ground lead to TP2.

e. Adjust L2 for maximum 5MHz signal at TP1.

f. Connect the oscilloscope input to TP3 and then adjust T1 and T3 for maximum 5MHz signal.

g. Connect the oscilloscope input together with a 50 ohm load to J4.

h. Adjust L1, T1, and T3 for maximum 10 MHz signal at J4.

i. Set the oscilloscope vertical sensitivity to 0.1V/cm and adjust vertical centering until the upper peaks of the 10 MHz signal are at the center of the CRT.

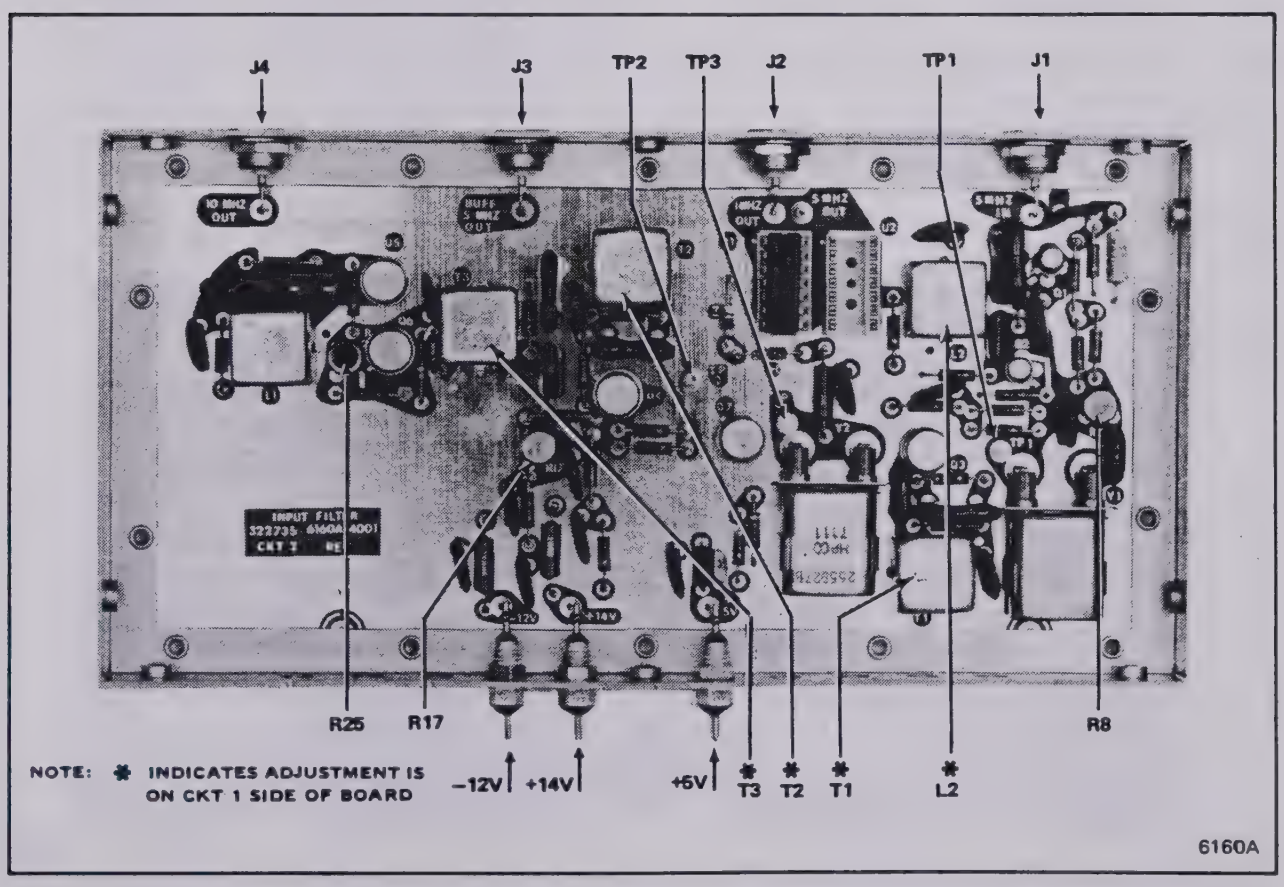

Figure 4-3. ADJUSTMENT, TEST POINT, AND INPUT/OUTPUT CONNECTOR LOCATIONS (6160A-4101)

j. Adjust R25 until each cycle of the 10 MHz signal at J4 are equal in amplitude (minimum 5MHz component).

k. Adjust R8 for a 10 MHz peak-to-peak output of 1.1 ±0.1V at J4.

l. Connect the input of an rf voltmeter together with a 50 ohm load to J3.

m. Adjust T2 for maximum rms voltage at J3.

n. Adjust R17 for a 1V rms output at J3.

o. Connect the oscilloscope input to J2, observing that the 5 MHz TTL output has a peak-to-peak amplitude of 3.5V.

p. Disconnect test equipment and replace module cover.

4-34. Resolution Extender (6160A-4017) –03 Option

4-35. Alignment of this assembly is done in the synthesizer using the following equipment:

a. Signal Generator
b. Spectrum Analyzer
c. Frequency Counter
d. Digital Voltmeter
e. TTL to 50 ohm isolator

4-36. Figure 4-4 shows adjustment, test point, and input/output connector locations on the Resolution Extender. Alignment is as follows:

a. Turn off the synthesizer and install the Resolution Extender on the riser card. Do not connect rf cables to J1 and J2.

b. Energize the synthesizer and set the front panel controls as follows:

FUNCTION	10 - 160 MHz
Frequency Dials	80.000000

c. Connect the frequency counter via TTL to 50 ohm isolator to J1 (OUT).

d. Apply a 1MHz signal having a level of at least 3.5V peak-to-peak to J2 (INPUT).

e. Connect a digital voltmeter to top of C8 (+) and TP3 (–).

f. Set the Frequency Dials to 80.000999, observing that the frequency counter indicates 1.999 MHz. Also record the digital voltmeter indication.

g. Set the Frequency Dials to 80.000899, observing that the frequency counter indicates 1.899 MHz. Also record the digital voltmeter indication.

h. Repeat steps f. and g. and adjust C23 counterclockwise until the difference between the digital voltmeter indication is less than 140mV.

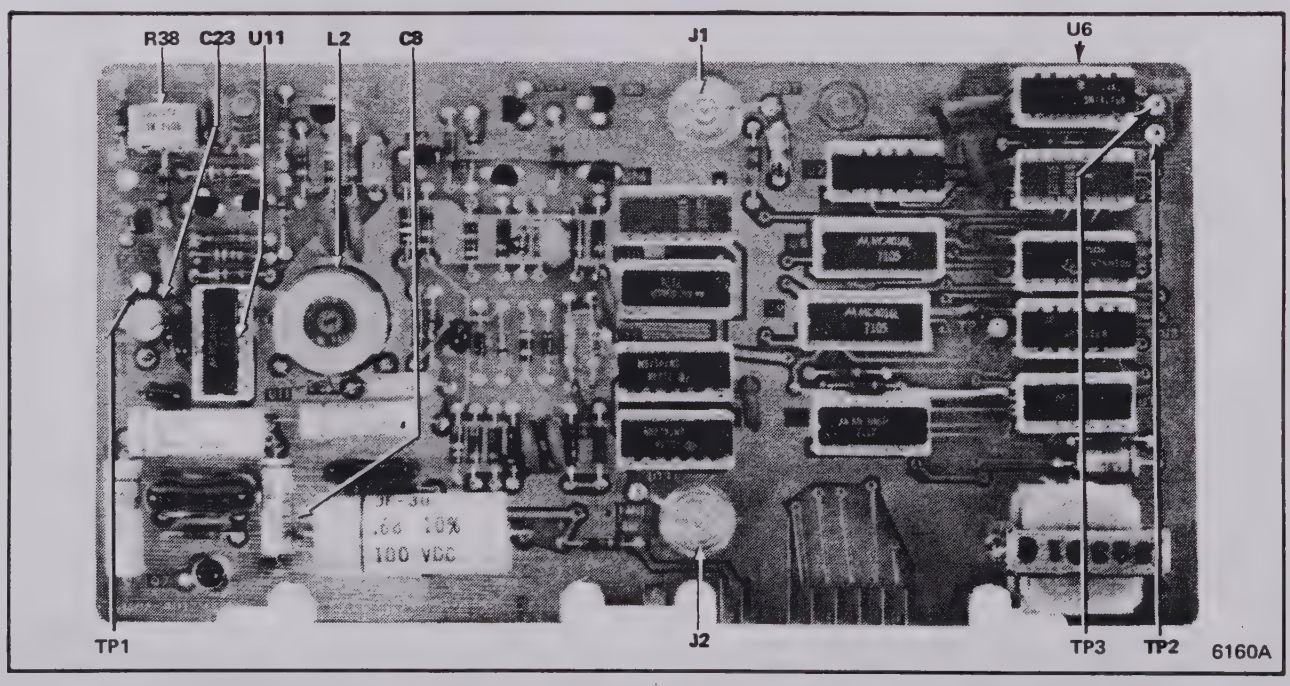

Figure 4-4. ADJUSTMENT, TEST POINT, INPUT/OUTPUT CONNECTOR LOCATIONS (6160A-4017)

i. Set the Frequency Dials to 80.000100 and then to 80.000000 and adjust C23 slightly clockwise until the difference between digital voltmeter indication is less than 210mV.

j. Repeat steps h. and i. until all conditions are met without adjustment of C23.

k. Disconnect the counter and digital voltmeter.

l. Connect a shorting jumper between TP2 and TP3.

m. Connect the frequency counter input (probe) to TP1 and its ground lead to TP3.

n. Adjust R38 for a frequency of 24 ±0.25 MHz at TP1.

o. Remove shorting jumper between TP2 and TP3.

p. Perform the following synthesis checks:

Frequency Dials	TP1 FREQ (MHz)
80.000000	10.00
80.000111	11.11
80.000222	12.22
80.000333	13.33
80.000444	14.44
80.000555	15.55
80.000666	16.66
80.000777	17.77
80.000888	18.88
80.000999	19.99

q. Disconnect frequency counter.

r. Connect spectrum analyzer via TTL to 50 ohm isolator to J1 (OUT).

s. Remove U6 from socket and then connect shorting jumper between pin 1 and 8 of socket.

t. Set Frequency Dials to 80.000400 and adjust L2 for minimum 10 kHz spurious output at J1. All other spurious outputs must be at least 25 dB down.

u. Check noise in 100 Hz band between carrier and 10 kHz spurious output, observing that noise level is at least 40 dB down. Noise peaking must be less than 3dB.

v. Repeat step u. at Frequency Dial settings of 80.000800 and 80.000999.

w. Turn off synthesizer, disconnect test equipment, and install U6.

x. Install Resolution Extender (6160A-4017) in synthesizer and reconnect rf cables.

4-37. 1 - 100 kHz D.U. (6160A-4002)

4-38. Alignment of this assembly is done in the synthesizer using the following equipment:

a. Frequency Counter

b. Oscilloscope

c. Digital Voltmeter

4-39. Figure 4-5 shows adjustment, test point, and input/output connector locations. Alignment is as follows:

4-40. STEP LOOP ALIGNMENT.

a. Remove screws which hold the 1 - 100 kHz Digit Unit assembly in place and then lift it away from the synthesizer until the hinged brackets lock in place. Leave all rf cables connected.

b. Energize the synthesizer and set the front panel controls as follows:

FUNCTION	10 - 160 MHz
Frequency Dials	80.000000

c. Connect a shorting jumper between TP1 and TP2.

d. Connect the input (probe) of a frequency counter to TP11 and its ground lead to TP2.

e. Observe that the signal at TP11 is greater than 20 MHz. If it is less than 20 MHz, adjust C11 for a 25.5 MHz signal.

f. Disconnect shorting jumper between TP1 and TP2 and perform the following synthesis checks:

Frequency Dials	TP11 FREQ (MHz)
80.000000	9
80.001000	10
80.002000	11
80.003000	12
80.004000	13
80.005000	14
80.006000	15
80.007000	16
80.008000	17
80.009000	18

g. Connect frequency counter input (probe) to TP23 and its ground lead to TP19.

h. Set Frequency Dials to 80.000000, observing, that the frequency counter indicates 9 MHz at TP23.

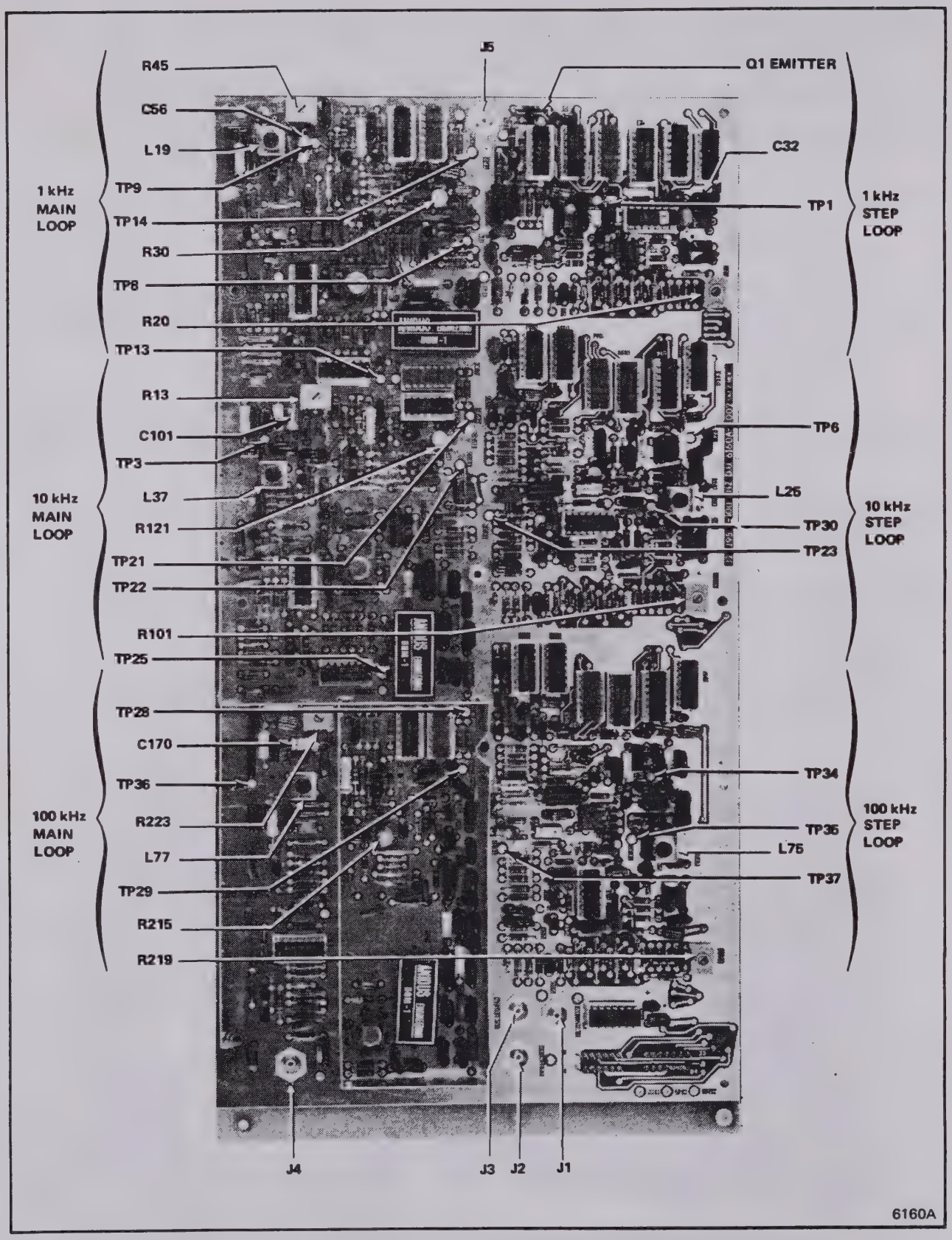

Figure 4-5. ADJUSTMENT, TEST POINT, INPUT/OUTPUT CONNECTOR LOCATIONS (6160A-4002)

i. Connect a digital voltmeter to TP6 (+) and TP30 (–).

j. Adjust L25 for +1.6 ±0.002Vdc at TP6.

k. Disconnect the digital voltmeter and then perform the following synthesis checks:

Frequency Dials	TP23 FREQ (MHz)
80.000000	9
80.010000	10
80.020000	11
80.030000	12
80.040000	13
80.050000	14
80.060000	15
80.070000	16
80.080000	17
80.090000	18

l. Disconnect rf cable from J1 (1MHz INPUT), observing that the signal at TP23 is less than 8.5 MHz.

m. Reconnect cable to J1.

n. Connect frequency counter input (probe) to TP37 and its ground lead to TP38.

o. Set Frequency Dials to 80.000000, observing that the frequency counter indicates 9 MHz at TP37.

p. Connect a digital voltmeter to TP34 (+) and TP35 (–).

q. Adjust L75 for +1.6 ±0.002Vdc at TP34.

r. Disconnect digital voltmeter and perform the following synthesis checks:

Frequency Dials	TP37 FREQ (MHz)
80.000000	9
80.100000	10
80.200000	11
80.300000	12
80.400000	13
80.500000	14
80.600000	15
80.700000	16
80.800000	17
80.900000	18

s. Disconnect rf cable from J1, observing that the signal at TP37 is less than 8.5 MHz.

t. Reconnect cable to J1 and set Frequency Dials to 80.000000.

4-41. MAIN LOOP ALIGNMENT.

a. Connect frequency counter input (probe) to TP13 and its ground lead to TP7.

b. Connect a digital voltmeter to TP9 (+) and negative end of C56 (–).

c. Adjust R20 and R45 for a 10 MHz signal at TP13. If necessary, adjust L19 in about two turns from flush (max. ccw) to obtain proper frequency.

d. Adjust L19 for +1.8 ±0.002Vdc at TP9.

e. Repeat steps c. and d. until all results are obtained without further adjustment.

f. Disconnect digital voltmeter and connect a shorting jumper between TP14 and TP7.

g. Set Frequency Dials to 80.009000 and adjust R45 for an 18.3 ±0.02 MHz signal at TP13.

h. Set Frequency Dials to 80.000000 and adjust R20 for a 9.3 ±0.02 MHz signal at TP13.

i. Repeat steps g. and h. until results are obtained without further adjustment.

j. Disconnect shorting jumper from TP14 and connect it to TP8.

k. Set Frequency Dials to 80.005000 and adjust R30 for a 17.7 ±20 kHz signal at TP13.

l. Set Frequency Dials to 80.004000, and then to 80.006000, observing corresponding counter indications of less than 16.7 MHz and 18.7 MHz. If necessary, adjust R30 for proper frequency.

m. Set Frequency Dials to 80.009000, observing that the signal at TP13 is greater than 20.5 MHz.

n. Disconnect shorting jumper from TP8 and TP7 and set Frequency Dials to 80.000000.

o. Connect frequency counter input (probe) to TP25 and its ground lead to TP20.

p. Connect a digital voltmeter to TP3 (+) and negative end of C101 (–).

q. Adjust R121 and R136 for a 10 MHz signal at TP20. If necessary, adjust L37 in about two turns from flush (max. ccw) to obtain frequency.

r. Adjust L37 for +1.8 ±0.002V dc at TP3.

s. Repeat steps q. and r. until all results are obtained without further adjustment.

t. Disconnect digital voltmeter and connect a shorting jumper between TP21 and TP20.

u. Set Frequency Dials to 80.090000 and adjust R136 for an 18.3 ±0.02 MHz signal at TP25.

v. Set Frequency Dials to 80.000000 and adjust R101 for a 9.3 ±0.02 MHz signal at TP25.

w. Repeat steps u. and v. until results are obtained without further adjustment.

x. Disconnect shorting jumper from TP21 and connect it to TP22.

y. Set Frequency Dials to 80.050000 and adjust R121 for a 17.7 ±0.02 MHz signal at TP25.

z. Set Frequency Dials to 80.040000 and then to 80.060000, observing corresponding counter indications of less than 16.7 MHz and 18.7 MHz. If necessary, adjust R121 for proper frequency.

aa. Set Frequency Dials to 80.090000, observing that the signal at TP25 is greater than 20.5 MHz.

ab. Disconnect shorting jumper from TP20 and TP22 and set Frequency Dials to 80.000000.

ac. Connect frequency counter input to J4.

ad. Connect a digital voltmeter to TP36 (+) and negative end of C170 (–).

ae. Adjust R219 and R223 for a 10 MHz signal at J4. If necessary, adjust L77 in about two turns from flush (max. ccw) to obtain frequency.

af. Adjust L77 for +1.8 ±0.002Vdc at TP36.

ag. Repeat steps ae. and af. until all results are obtained without further adjustment.

ah. Disconnect digital voltmeter and connect a shorting jumper between TP28 and TP27.

ai. Set Frequency Dials to 80.900000 and adjust R223 for an 18.3 ±0.02 MHz signal at J4.

aj. Set Frequency Dials to 80.000000 and adjust R219 for a 9.3 ±0.02 MHz signal at J4.

ak. Repeat steps ai. and aj. until results are obtained without further adjustment.

al. Disconnect shorting jumper from TP28 and connect it to TP29.

am. Set Frequency Dials to 80.500000 and adjust R125 for a 17.7 ±0.02 MHz signal at J4.

an. Set Frequency Dials to 80.400000 and then to 80.600000, observing corresponding counter indications of less than 16.7 MHz and 18.7 MHz. If necessary, adjust R215 for proper frequency.

ao. Set Frequency Dials to 80.900000, observing that the signal at J4 is greater than 20.5 MHz.

ap. Disconnect shorting jumper from TP27 and TP29 and then perform the following synthesis checks:

Frequency Dials	J4 FREQ (MHz)
80.000000	10.00
80.111000	11.11
80.222000	12.22
80.333000	13.33
80.444000	14.44
80.555000	15.55
80.666000	16.66
80.777000	17.77
80.888000	18.88
80.999000	19.99

aq. Set Frequency Dials to 80.000000 and perform the oscilloscope checks given in Table 4-2. The observed TTL waveforms must be low for the specified period. All waveforms will have a repetition rate of 1 MHz.

Table 4-2. 1 – 100 KHz ASSEMBLY CHECK

TEST POINT	PERIOD (nsec.)
U10 Pin 4	250 – 350
U21 Pin 4	250 – 350
U34 Pin 4	250 – 350
U6 Pin 4	75 – 125
U18 Pin 13	250 – 350 (connect 2.7k between TP6 to TP19)
U18 Pin 2	75 – 125
U30 Pin 2	75 – 125
U30 Pin 13	250 – 350 (connect 2.7k between TP34 to grd)

6160A

ar. Disconnect the test equipment and install the 1 - 100 kHz Digit Unit in its proper position in the synthesizer.

4-42. 1 MHz D.U. Step Loop (6160A-4103)

4-43. This module is removed from the synthesizer and aligned with the following equipment:

a. Power Supply (+5V, +14V and −12V)
b. Signal Generator
c. Frequency Counter
d. Oscilloscope
e. Digital Voltmeter
f. Spectrum Analyzer
g. 50 ohm load
h. 2.2k, ¼W resistor

4-44. Figure 4-6 shows adjustment, test point, and input/output connector locations on the 1 MHz D.U. Step Loop module. Alignment is as follows:

a. Remove the cover from the module.

b. Apply dc voltages (+5V, +14V, −12V) to the appropriate feed-thru connectors on the module. Connect power supply common to the module chassis.

c. Apply a 5 MHz squarewave signal having a peak-to-peak amplitude of 3.5V to J1.

d. Connect the input of a frequency counter to J4.

e. Connect a digital voltmeter to TP3 (+) and TP7 (−).

f. Adjust T1 for +2 ±0.02Vdc at TP3. The output signal at J4 should be 9 MHz.

g. Perform the synthesis checks in Table 4-3 by grounding the appropriate feed-thru connectors. Reconnect all jumpers upon completion.

h. Disconnect 5 MHz input to J1, observing that the voltage at TP3 is +1 to +1.3Vdc and the output signal at J4 is 8 to 8.6 MHz.

i. Reconnect 5 MHz input to J1 and then connect a shorting jumper between TP1 and TP2. The voltage at TP3 should be +14.5V to +15Vdc, and the output signal at J4 should be 5 to 21 MHz.

j. Disconnect shorting jumper from TP1 and TP2, digital voltmeter, and frequency counter.

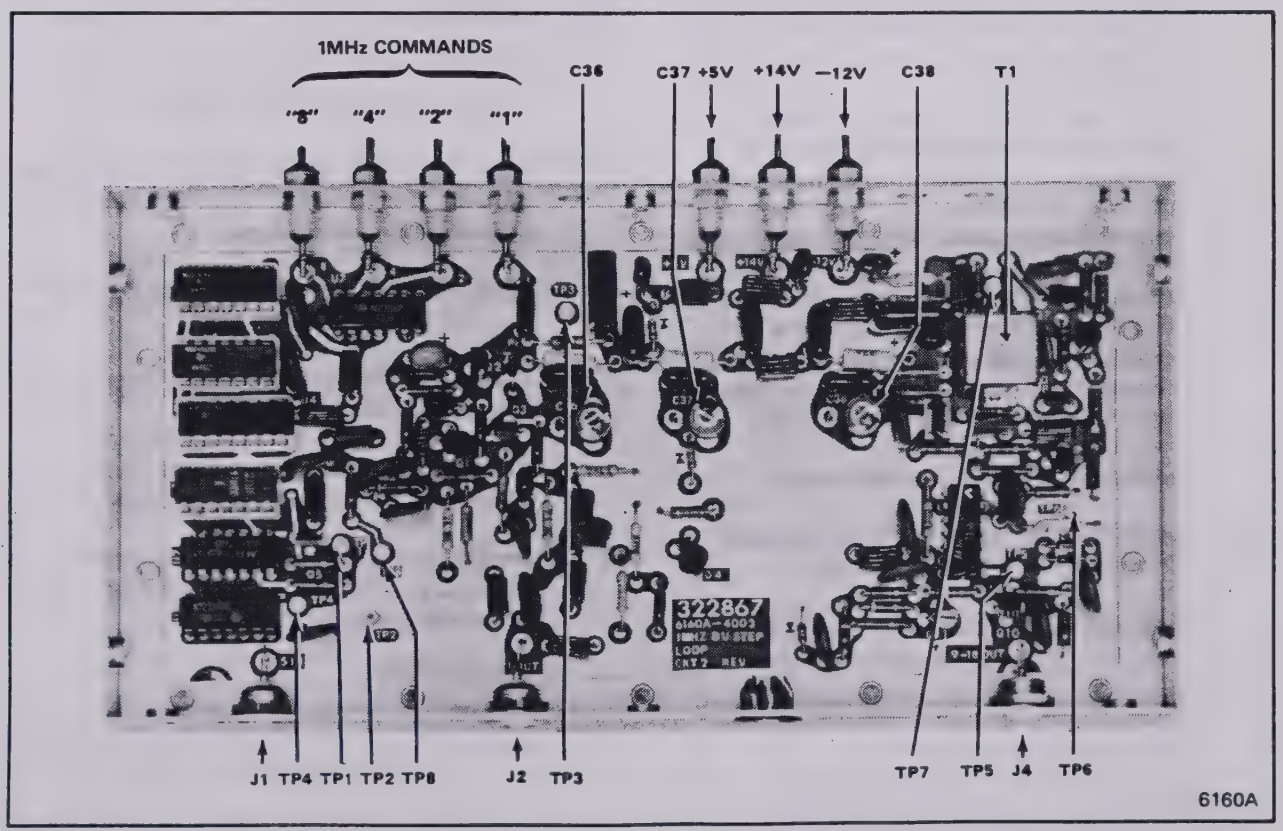

Figure 4-6 ADJUSTMENT, TEST POINT, INPUT/OUTPUT CONNECTOR LOCATIONS (6160A-4103)

Table 4-3. 1 MHz STEP LOOP STEP COMMANDS

STEP No.	GROUNDED TERMINAL (S)	SYNTHESIZED OUTPUT (J4)
1	8, 4, 2, 1	9 MHz
2	8, 4, 2	10 MHz
3	8, 4, 1	11 MHz
4	8, 4	12 MHz
5	8, 2, 1	13 MHz
6	8, 2	14 MHz
7	8, 1	15 MHz
8	8	16 MHz
9	4, 2, 1	17 MHz
10	4, 2	18 MHz

6160A

k. Connect the input of an oscilloscope together with a 50 ohm load to J4.

l. Repeat the jumper connections in Table 4-3, observing that a symmetrical squarewave output having an amplitude of 0.44 to 0.56V peak-to-peak is present at J4.

m. Reconnect all jumpers to feed-thru connectors and connect oscilloscope input (probe) to J2. A positive, 0.2μs pulse having an amplitude of greater than 3.3V should be observed. Repetition rate is 1 MHz.

n. Jumper only "8" and "2" feed-thru connectors to ground and connect oscilloscope input (probe) to TP8 (ground lead to TP2). A positive, 32 to 42ns pulse having an amplitude of 3.3V to 4.5V peak-to-peak should be present. Repetition rate is 1 MHz.

o. Connect oscilloscope probe to TP4 and connect a 2.2k, ¼W resistor between +14V input and TP3. A positive pulse having an amplitude of 2.2V to 2.8V peak-to-peak should be present. Repetition rate is 1 MHz and duty cycle is 30% to 70%.

p. Disconnect 2.2k resistor and oscilloscope.

q. Connect spectrum analyzer to J4 and establish a 0dB reference for the 14 MHz output.

r. Set the spectrum analyzer control to −30dB and jumper only "8" feed-thru connector to ground.

s. Adjust C36 for a dip in the 2 MHz side band displayed on the spectrum analyzer.

t. Jumper "8" and "1" feed-thru connectors to ground and connect a 2.2k, ¼W resistor between +14V input and TP3.

u. Adjust C37 and C38 for a dip in the 1 MHz side band.

v. Repeat steps r. through u. until results are obtained without further adjustment.

w. Disconnect 2.2k resistor.

x. Check for spurious outputs at J4 as follows:

Feed-thru (GND)	J4 FREQ (MHz)	MAX. SPURIOUS
"8" "1"	15	−95dB
"8"	16	−95dB
"4""2""1"	17	−85dB

y. Disconnect test equipment and replace module cover.

4-45. 1 MHz D.U. IF Mixer (6160A-4104)

4-46. This module is removed from the synthesizer and aligned with the following equipment:

a. Power Supply

b. Signal Generator (2)

c. Oscilloscope

4-47. Figure 4-7 shows adjustment, test point, and input/output connector locations on the 1 MHz D.U. IF Mixer module. Alignment is as follows:

a. Remove the cover from the module.

b. Apply +14V and −12V to the appropriate feed-thru connectors on the module. Connect power supply common to the module chassis.

c. Apply a 1 MHz signal having a level of 1V rms to J1.

d. Apply a 22.8 MHz squarewave signal having a peak-to-peak amplitude of 1V to J2.

e. Connect oscilloscope input to J4 and adjust C33 for minimum output signal (less than 0.6V pk-pk).

f. Set signal generator frequency at J2 to 20 MHz, observing that a 2 MHz output having the following characteristics is present at J4:

Peak Amplitude	−>2.6V
Baseline	−<0.3V
Rise/Fall Time	−<15ns between 10% and 90% points

g. Increase signal generator frequency at J2 until flat portions of waveform just disappear. Flat portions

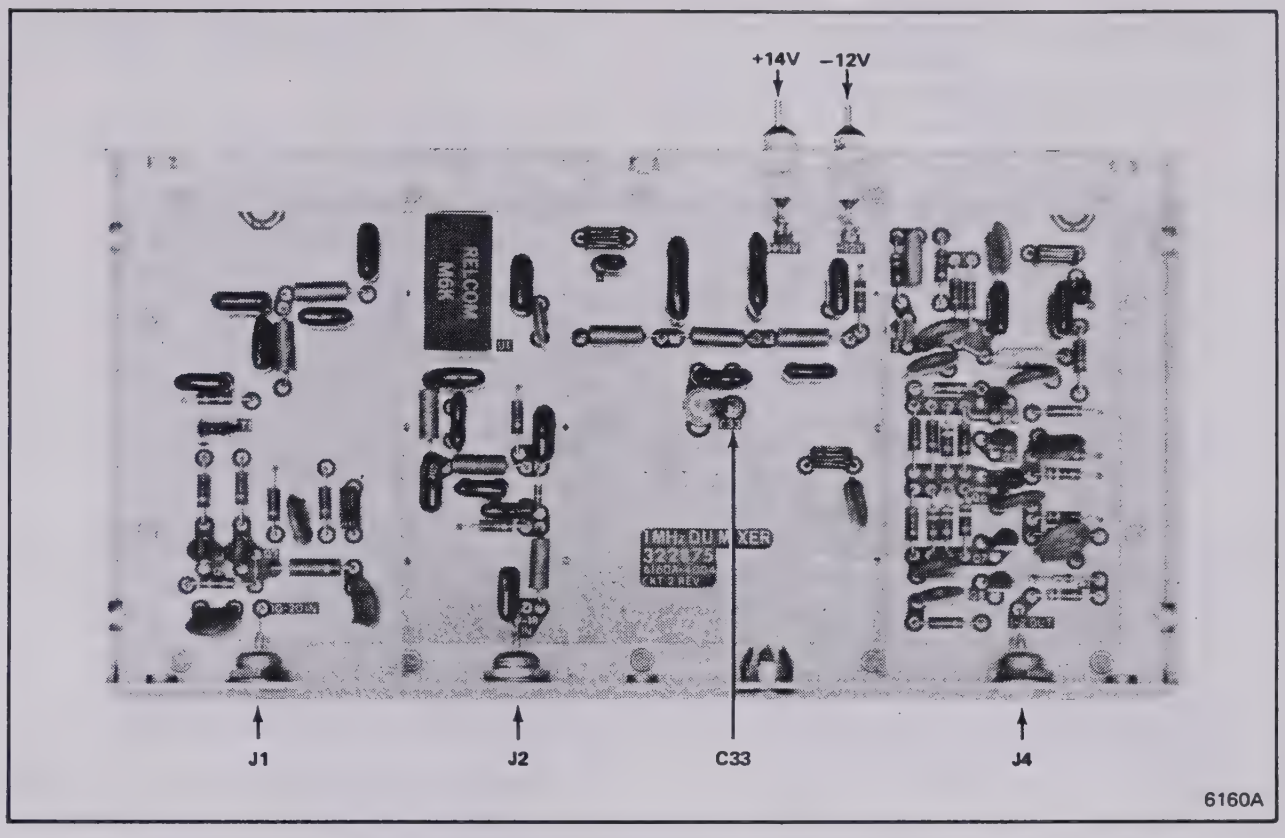

Figure 4-7 ADJUSTMENT, TEST POINT, INPUT/OUTPUT, CONNECTOR LOCATIONS (6160A-4104)

should disappear between settings of 22.1 and 22.6 MHz on the signal generator.

h. Disconnect test equipment and replace module cover.

4-48. 1 MHz D.U. Main Loop (6160A-4105)

4-49. This module is removed from the synthesizer and aligned with the following equipment:

a. Power Supply (+5V, +14V, and −12V)
b. Signal Generator (2)
c. Frequency Counter
d. Digital Voltmeter
e. Spectrum Analyzer
f. Oscilloscope
g. 82k, ¼W resistor

4-50. Figure 4-8 shows adjustment, test point, and input/output connector locations on the 1 MHz D.U. Main Loop module. Alignment is as follows:

a. Remove the cover from the module.

b. Apply dc voltages (+5V, +14V, −12V) to the appropriate feed-thru connectors on the modules. Connect power supply common to the module chassis.

c. Apply a 1 MHz signal having a peak-to-peak amplitude of 3V to J3.

d. Apply a 10 MHz signal having a peak-to-peak amplitude of 1V to J4.

e. Connect the input of a frequency counter to J1.

f. Connect a digital voltmeter to TP2 (+) and TP1 (−).

g. Jumper "8", "4", "2" feed-thru connectors to ground.

h. Connect a shorting jumper between TP1 and TP6 and adjust R8 and R11 for +2 ±0.01V dc at TP2.

i. Adjust T1 for a 10 ±0.01 MHz signal at J1.

j. Jumper "4" and "2" feed-thru connectors to ground and adjust R11 for an 18 ±0.02 MHz signal at J1.

k. Jumper "8", "4", "2" feed-thru connectors to ground and adjust R8 for a 10 ±0.02 MHz signal at J1.

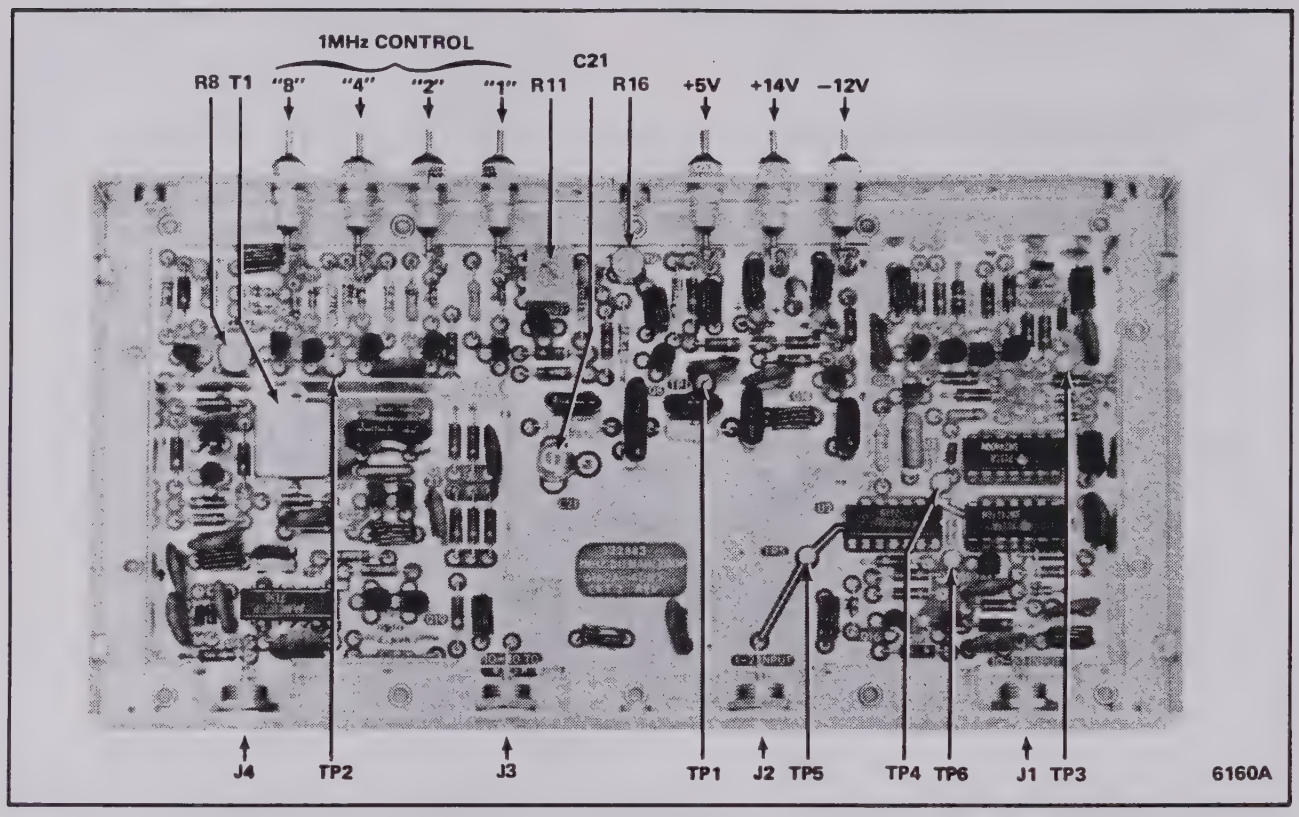

Figure 4-8. ADJUSTMENT, TEST POINT, INPUT/OUTPUT CONNECTOR LOCATIONS (6160A-4105)

l. Repeat steps j. and k. until all results are obtained without further adjustment.

m. Jumper "8", "4", "2", "1" feed-thru connectors to ground and adjust R8 for a 9.25 ±0.02 MHz signal at J1.

n. Disconnect shorting jumper from TP6 and connect it to TP5.

o. Jumper "8", "4", "2" feed-thru connectors to ground and record output signal at J1. It should be approximately 12.5 MHz.

p. Jumper "4" and "2" feed-thru connectors to ground and record output signal at J1. It should be approximately 20.5 MHz.

q. Choose the lowest frequency observed in step o. or p. and adjust R16 for a 12.5 MHz or 20.5 MHz (±0.02 MHz) signal at J1.

r. Jumper "4" and "2" feed-thru connectors to ground and connect digital voltmeter to TP2 (+) and module chassis (−). The voltage at TP2 should be greater than +1Vdc.

s. Disconnect digital voltmeter and shorting jumper from TP5.

t. Perform the synthesis checks in Table 4-4 by grounding the appropriate feed-thru connectors.

Table 4-4. 1 MHz D.U. MAIN LOOP TEST CHECKS

STEP No.	GROUNDED TERMINAL (S)	SYNTHESIZED OUTPUT (J4)
1	8, 4, 2, 1	9 MHz
2	8, 4, 2	10 MHz
3	8, 4, 1	11 MHz
4	8, 4	12 MHz
5	8, 2, 1	13 MHz
6	8, 2	14 MHz
7	8,1	15 MHz
8	8	16 MHz
9	4, 2, 1	17 MHz
10	4, 2	18 MHz
11	4, 1	19 MHz

6160A

u. Connect the input of an oscilloscope (probe) together with a 50 ohm load to J2.

v. Repeat step t. observing that a symmetrical square-wave signal having an amplitude of 0.8 to 1.2V peak-to-peak is available.

w. Disconnect oscilloscope and connect the input of a spectrum analyzer to J1.

x. Jumper "8", "2", "1" feed-thru connectors to ground and connect an 82k, ¼W resistor between TP1 and +14V input.

y. Establish a 0dBm reference on the spectrum analyzer for the 13 MHz output at J1.

z. Jumper "8" and "2" feed-thru connectors to ground.

aa. Set the spectrum analyzer control to −30dBm and adjust C21 for minimum 1 MHz side band.

ab. Disconnect 82k resistor from TP1, observing that the 1 MHz side band at J1 is greater than 100 dB down.

ac Jumper "8" and "1" feed-thru connectors to ground. Observe that the 2 MHz side band of the 15 MHz output at J1 is greater than 90 dB down.

ad. Disconnect test equipment and replace module cover.

4-51. 10 MHz D.U. Main P.D. (6160A-4109)

4-52. This module is removed from the synthesizer and aligned with the following equipment:

a. Power Supply (+5V, +14V, and −12V)

b. Signal Generator (2).

c. Oscilloscope.

d. 6dB Splitter.

e. 10dB Attentuator.

f. Digital Voltmeter.

g. 50 ohm load.

4-53. Figure 4-9 shows adjustment, test point, and input output connector locations on the 10 MHz D.U. Main P.D. module. Alignment is as follows:

a. Remove the cover from module.

b. Apply dc voltages (+5V, +14V, −12V) to the appropriate feed-thru connectors on the module. Connect power supply common to the module chassis.

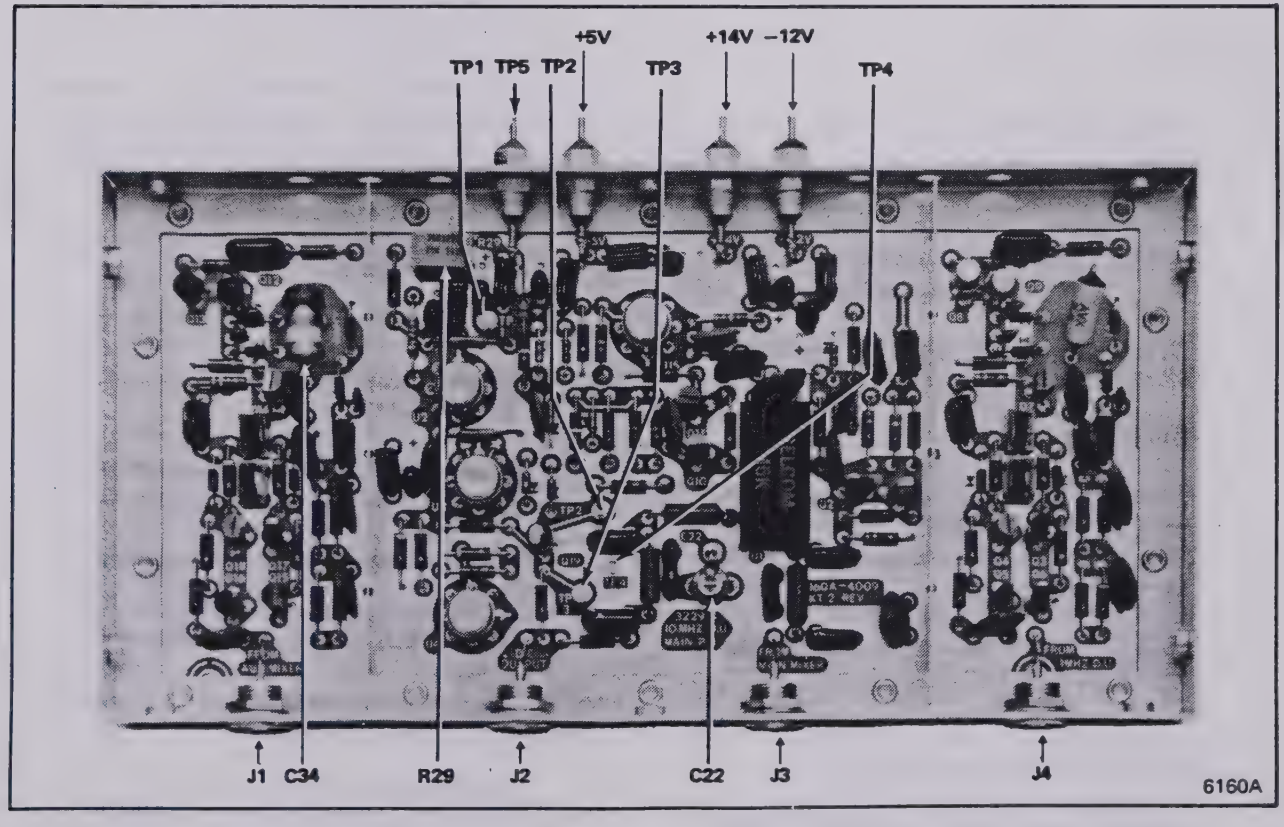

Figure 4-9. ADJUSTMENT, TEST POINT, INPUT/OUTPUT CONNECTOR LOCATIONS (6160A-4109)

c. Connect the input of an oscilloscope to J2. Set the oscilloscope to dc input and establish a 0V reference.

d. Connect a 50 ohm load to J3 and connect a shorting jumper between −12V input and TP5 feed-thru connector.

e. Adjust R29 for 0Vdc at J2.

f. Make the test equipment connections shown in Figure 4-10.

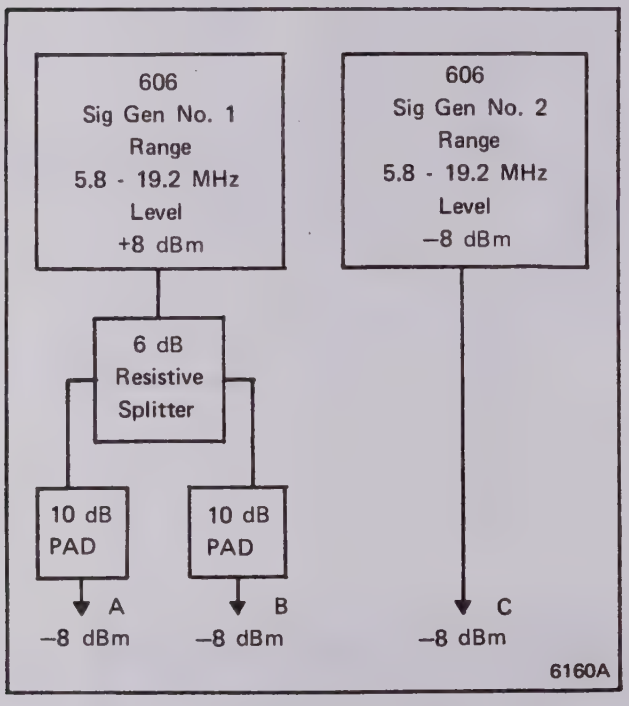

Figure 4-10. EQUIPMENT CONNECTION FOR 10 MHz D. U. MAIN PD TEST

g. Set signal generator No. 1 to 15 MHz and connect A output to J1 and B output to J4.

h. Adjust C34 for 0V dc at J2.

i. Tune signal generator No. 1 from 10 to 190 MHz, observing that the dc voltage at J2 does not change more than +4mV. If necessary, adjust C34 to satisfy this requirement.

j. Set signal generator No. 1 to 15 MHz and adjust R29 for 0V dc at J2.

k. Disconnect 50 ohm load from J3 and connect the output (C) of signal generator No. 2 to J3.

l. Set signal generator No. 1 to 10 MHz and signal generator No. 2 to 20 MHz. Also disconnect shorting jumper between −12V and TP5 feed-thru connector.

m. Connect a shorting jumper between TP2 and TP4 and adjust C22 for a minimum amplitude (less than 40mV peak-to-peak) 10 MHz signal at J2.

n. Set signal generator No. 1 to 15 MHz and No. 2 to 16 MHz, observing that the 1 MHz signal at J2 has a peak-to-peak amplitude of 40 mV. Offset should be less than ±2mV dc.

o. Disconnect shorting jumper between TP2 and TP4.

p. Connect digital voltmeter to TP2 (+) and TP4 (−).

q. Tune signal generator No. 2 from 12 MHz to 18 MHz, observing that the voltage at TP2 is −10.7 ±0.7V dc, except when signal generator frequency is 15 ±0.02 MHz. At 15 ±0.02 MHz the voltage at TP2 should be 0 ±50 mV.

r. Disconnect signal generator No. 1 output (B) from J4 and signal generator No. 2 output (C) from J3.

s. Connect signal generator No. 2 output (C) to J4 and tune it slowly down from 15 MHz. The voltage at J2 should decrease from 0 ±2 mV to −22 ±5 mV at a signal generator No. 2 frequency of 14.2 to 13.8 MHz.

t. Slowly increase signal generator No. 2 frequency, observing that the voltage at J2 increases from 0 ±2 mV to +22 ±5 mV at a signal generator frequency of 15.8 to 16.2 MHz.

u. Connect a shorting jumper between −12V and TP5 feed-thru connector.

v. Connect digital voltmeter to TP3 (+) and TP4 (−).

w. Tune signal generator No. 2 until the voltage at TP3 is 1 ±0.05V dc.

x. Connect a shorting jumper between TP2 and TP4, observing that the voltage at TP3 is 0 ±35 mV.

y. Disconnect test equipment and replace module cover.

4-54. 10 MHz D.U. Step Loop (6160A-4106-1)

4-55. This module is removed from the synthesizer and aligned with the following equipment:

a. Power Supply (+5V, +14V, −12V).

b. Oscilloscope.

c. Signal Generator (2).

d. Digital Voltmeter.

e. 50 ohm Load.

f. 6.8k, ¼W Resistor.

g. 12k, ¼W Resistor.

4-56. Figure 4-11 shows adjustment, test point, and input/output connector locations on the 10 MHz D.U. Step Loop P.D. module. Alignment is as follows:

a. Remove the cover from the module.

b. Connect the input of an oscilloscope (probe) to TP4 and its ground lead to TP3.

c. Apply a 10 MHz signal having a level of +13 dBm ±2db to J2.

d. Adjust C13 for a minimum amplitude 10 MHz signal (less than 70 mV peak-to-peak) at TP4.

e. Disconnect the oscilloscope and signal generator from the module.

f. Apply dc voltages (+5V, +14V, −12V) to appropriate feed-thru connectors on the module. Connect power supply common to the module chassis.

g. Apply +5V to "4" feed-thru connector.

h. Apply a 140 MHz signal having a level of +5dBm ±2dB to J1.

i. Connect a digital voltmeter together with a 50 ohm load to J2, observing that the dc voltage is 0 ±0.6mV. Disconnect the digital voltmeter upon completion of this step.

j. Apply a 10 MHz signal having an amplitude of +7 dBm ±2 dB to J4.

k. Connect the input of an oscilloscope (probe) to TP1 and its ground lead to TP3.

l. Adjust T4 for maximum amplitude 10 MHz signal at TP1.

m. Adjust R27 for a 10 MHz signal having a peak-to-peak amplitude of 3V at TP1.

n. Adjust R34 until the notch in the 10 MHz waveform is slightly above the center point (zero crossing).

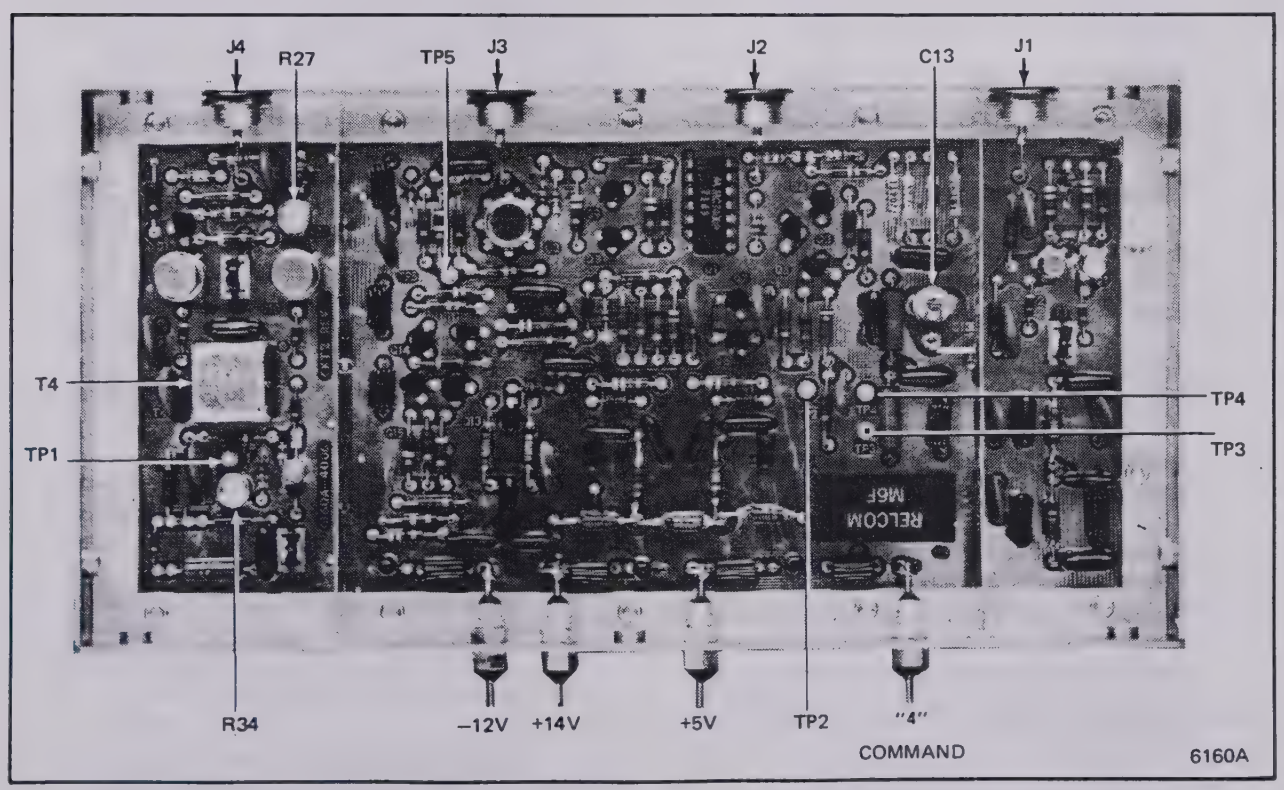

Figure 4-11. ADJUSTMENT, TEST POINT, INPUT/OUTPUT CONNECTOR LOCATIONS (6160A-4106-1)

o. Repeat step l. and n. until results are obtained without further adjustment.

p. Connect the input of the oscilloscope together with a 50 ohm load to J2.

q. Connect a shorting jumper between TP2 and TP3. Also disconnect +5V from "4" feed-thru and then ground the feed-thru.

r. Apply a 71 MHz signal having a level of +5dBm ±2dB to J1.

s. Adjust R27 for a 1MHz beat signal at J2 which has a peak-to-peak amplitude of 60 +0/−5mV.

t. Perform the checks in Table 4-5, observing that the 1MHz beat signal at J2 has a peak-to-peak amplitude of 35 to 60 mV.

Table 4-5. BEAT SIGNAL CHECKS

J1 FREQ (MHz)	"4" FEED-THRU
71	GND
81	GND
91	GND
101	GND
111	+5V
121	+5V
131	+5V
141	+5V

6160A

u. Disconnect the shorting jumper from TP2.

v. Apply a 141 MHz signal having a level of +5dBm ±2dB to J1. Also ensure that the "4" feed-thru connector has +5V applied.

w. Connect a digital voltmeter to TP5 (+) and TP3 (−), observing that the voltage at TP5 is +2 to +3V dc.

x. Establish a 0V reference (dc coupled input) on the oscilloscope connected to J2.

y. Apply −12Vdc via a 6.8k, ¼W resistor to J3, observing that the peaks of the output signal at J2 shift −10 ±2mV dc.

z. Apply +14Vdc via a 12k, ¼W resistor to J3, observing that the peaks of the output signal at J2 shift +10 ±2mVdc.

aa. Disconnect test equipment and replace module cover.

4-57. 10 MHz D.U. Step Loop VCO (6160A-4107-1)

4-58. This module is removed from the synthesizer and aligned with the following equpment:

a. Power Supply (+5V, +14V, −12V).

b. Frequency Counter.

c. Digital Voltmeter.

d. RF Voltmeter.

e. Signal Generator.

f. Voltage Calibrator.

g. 50 ohm load.

h. 1K ohm, ¼W Resistor (2 each).

i. 33k, ¼W Resistor.

j. 39k, ¼W Resistor.

k. 3M, ¼W, Resistor.

l. 3.3M, ¼ Resistor.

m. 130Ω, ¼W Resistor.

4-59. Figure 4-12 shows adjustment, test point, and input/output connector locations on the 10 MHz D.U. Step Loop VCO module. Alignment is as follows:

a. Remove the cover from the module.

b. Apply dc voltages (+5V, +14V, −12V) to appropriate feed-thru connectors on the module. Connect power supply common to the module chassis.

c. Apply −12Vdc via a 33k, ¼W resistor to J1. Also connect a 130Ω, ¼ resistor from J1 to ground.

d. Connect a digital voltmeter to TP1 (+) and the module chassis (−).

e. Jumper the "4", "2", "1" feed-thru connectors to ground (one at a time) until the voltage at TP1 is nearly 8V, but less than 8V.

f. Disconnect the input voltage of J1 and then adjust R60 until a point is found where adjustment in either direction causes the voltage at TP1 to increase or decrease a few hundred mV.

g. Apply −12Vdc via a 3M, ¼W resistor to J1, observing that the voltage at TP1 decreases the same amount as in step f.

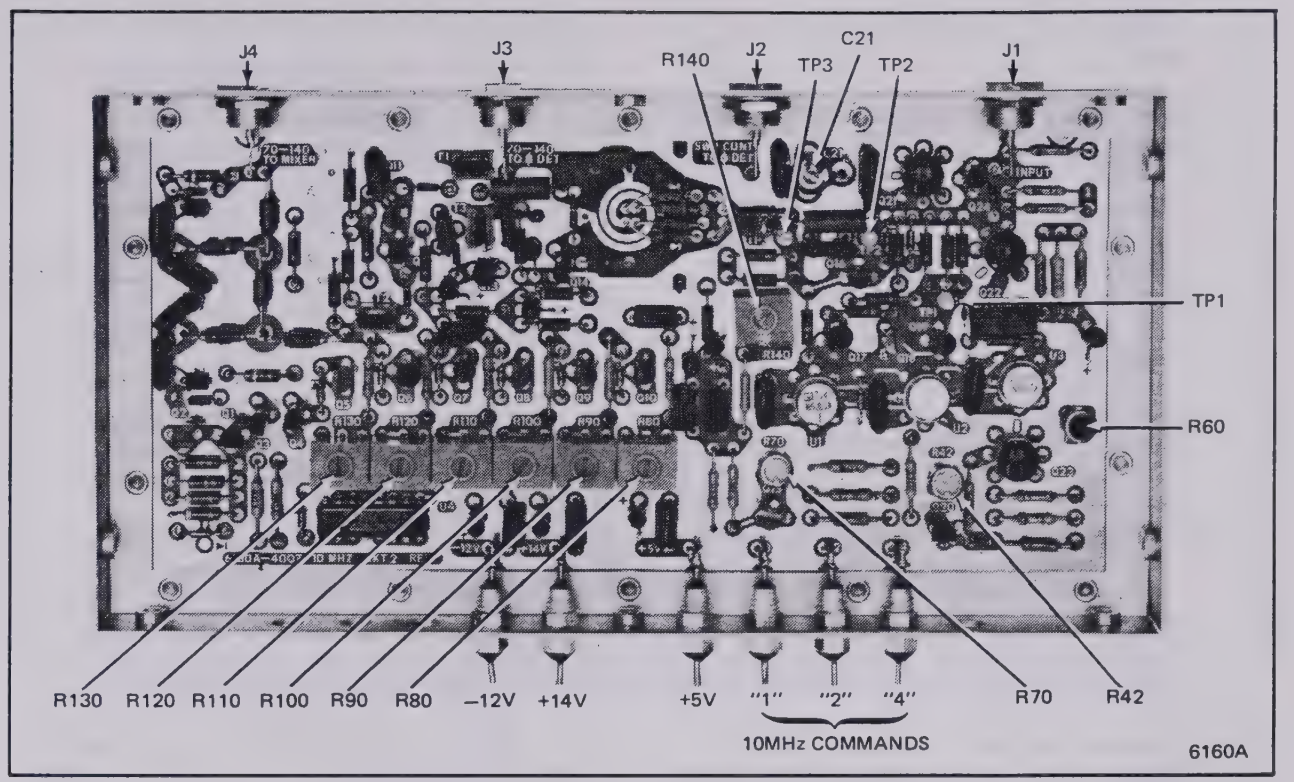

Figure 4-12. ADJUSTMENT, TEST POINT, INPUT/OUTPUT CONNECTOR LOCATIONS (6160A-4107-1)

h. Apply +14V via a 3.3M, ¼W resistor to J1, observing that the voltage at TP1 increases the same amount as in step f.

i. Repeat steps f. thru h. until all results are obtained without further adjustment.

j. Connect the input of a frequency counter to J4.

k. Jumper only the "2" "1" feed-thru connectors to ground. Connect the "4" feed-thru connector to the +5V dc supply through a 1K resistor.

l. Apply –12Vdc via a 33k, ¼W resistor to J1 and adjust R110 and R140 for a 7MHz indication on the frequency counter.

m. Apply +14Vdc via a 39k, ¼W resistor to J1.

n. Adjust R42 for a 3MHz indication on the frequency counter.

o. Jumper the "4" "2" "1" feed-thru connectors to ground.

p. Apply –12Vdc via a 33k, ¼W resistor to J1 and record the frequency counter indication.

q. Apply +14Vdc via a 39k, ¼W resistor to J1 and record the frequency counter indication.

r. Repeat steps p. and q. and adjust R70 until same frequency counter indication is observed in both steps.

s. Disconnect jumpers from "4" "2" "1" feed-thru connectors.

t. Repeat steps p. and q. and adjust R140 until the same frequency counter indication is observed in both steps.

u. Jumper only "4" "2" feed-thru connectors to ground.

v. Repeat steps p. and q. and adjust R80 until the same frequency is observed in both steps.

w. Jumper only "4" "1" feed-thru connectors to ground.

x. Repeat steps p. and q. and adjust R90 until the same frequency is observed in both steps.

y. Jumper only "4" feed-thru connector to ground.

z. Repeat steps p. and q. and adjust R100 until the same frequency is observed in both steps.

aa. Jumper only "2" "1" feed-thru connectors to ground.

ab. Repeat steps p. and q. and adjust R110 until the same frequency is observed in both steps.

ac. Jumper only "2" feed-thru connector to ground.

ad. Repeat steps p. and q. and adjust R120 until the same frequency is observed in both steps.

ae. Jumper only "1" feed-thru connector to ground.

af. Repeat steps p. and q. and adjust R130 until the same frequency is observed in both steps.

ag. Jumper the "4" "2" "1" feed-thru connectors to ground and apply −12Vdc via a 33k, ¼W resistor to J1.

ah. Observed that the voltage at TP1 is at least +1Vdc. If not, lengthen two loops of wire (No. 1, No. 2) until there is +1Vdc at TP1.

ai. Disconnect the jumpers from the "4" "2" "1" feed-thru connectors, observing that the voltage at TP1 is less than +11.4Vdc.

aj. Apply +14Vdc via a 39k, ¼W resistor to J1, observing that the voltage at TP1 is less than +12.2 Vdc.

ak. Disconnect +5V, +14V, −12V input power to the module and connect the input of an rf voltmeter to TP3.

al. Apply a 10 MHz signal having a level of 1V rms to TP3 and adjust C21 for maximum rms voltage at TP3.

am. Disconnect rf voltmeter and 10 MHz signal.

an. Apply dc voltages (+5V, +14V, −12V) to the appropriate feed-thru connectors. Connect power supply common to the module chassis.

ao. Connect an rf voltmeter together with a 50 ohm load to J3.

ap. Apply −12Vdc via a 33k, ¼W resistor to J1 and perform output checks in Table 4-6.

aq. Apply +14V dc via a 39k, ¼W resistor to J1 and perform the output checks in Table 4-7.

ar. Connect rf voltmeter together with 50 ohm load to J4.

Table 4-6. 70MHz THRU 100MHz OUTPUT CHECKS

STEP	GROUNDED TERMINAL	J3 OUTPUT LEVEL
1	4, 2, 1	3 ±2dBm
2	4, 2	
3	4, 1	
4	4	6160A

Table 4-7. 110MHz THRU 140MHz OUTPUT CHECKS

STEP	GROUNDED TERMINAL	J3 OUTPUT LEVEL
1	2, 1	3 ±2dBm
2	2	
3	1	
4	NONE	6160A

as. Repeat steps ap. and aq., observing that a 1.5 ±1dBm output is present at J4.

at. Connect the digital voltmeter together with a 1k ohm load to J2.

au. Apply −12Vdc via a 33k, ¼W resistor to J1, observing that the output voltage at J2 is +1.1 ±0.1Vdc.

av. Apply +14Vdc via a 39k, ¼W resistor to J1, observing that the output voltage at J2 is −1.5 ±0.1Vdc.

aw. Disconnect test equipment and replace module cover.

4-60. 10 MHz D.U. I.F. Mixer (6160A-4108)

4-61. This module is removed from the synthesizer and aligned with the following equipment:

a. Power Supply (+5V, +14V and −12V)

b. Signal Generator (2).

c. RF Voltmeter (with rf probe).

d. 50 ohm load (2).

4-62. Figure 4-13 shows adjustment, test point, and input/output connector locations on the 10 MHz D.U. I.F. Mixer module. Alignment is as follows:

a. Remove the cover from the module.

b. Apply dc voltages (+5V, +14V, −12V) to the appropriate feed-thru connectors on the module. Connect power supply common to the module chassis.

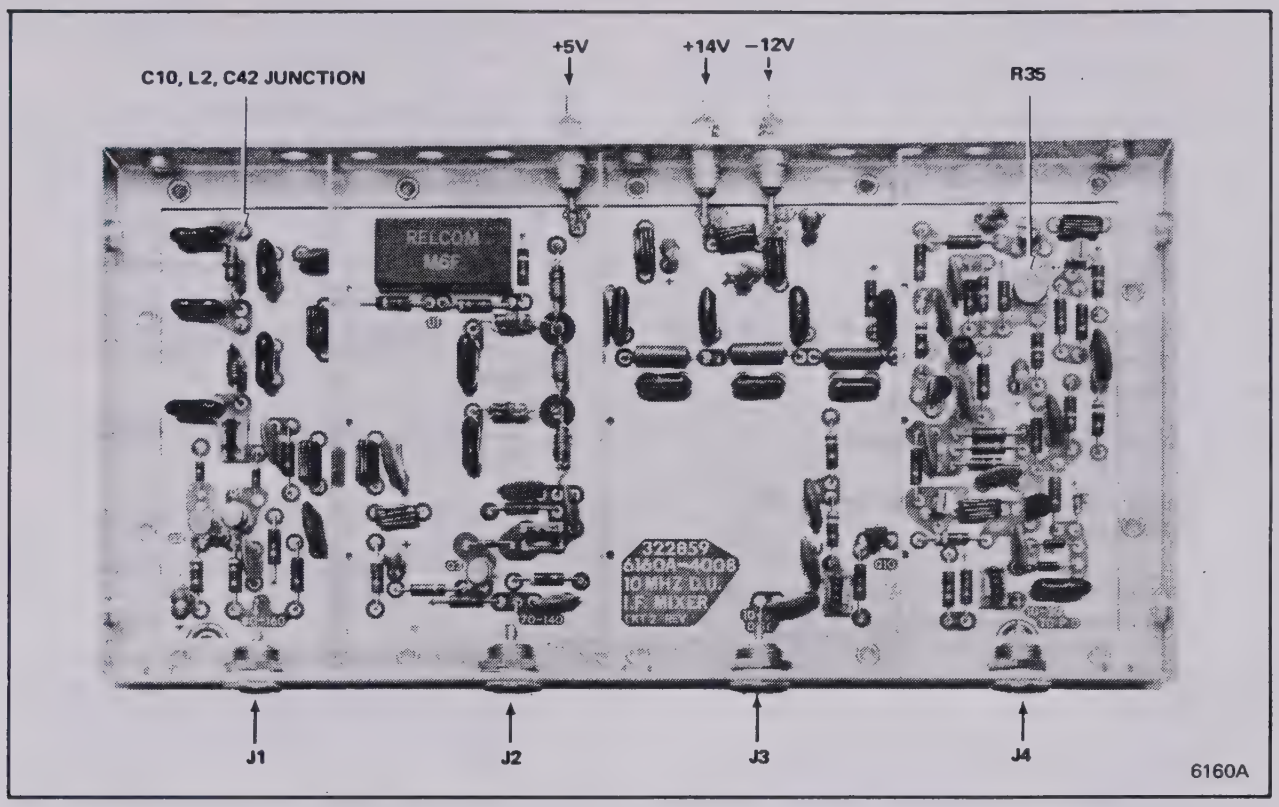

Figure 4-13. ADJUSTMENT, TEST POINT, INPUT/OUTPUT CONNECTOR LOCATIONS (6160A-4108)

c. Apply a 115 MHz signal having a level of +5dBm ±2dB to J1.

d. Apply a 100 MHz signal having a level of +1dBm ±0.5dB to J2.

e. Connect a 50 ohm load to J3.

f. Connect the input of an rf voltmeter together with a 50 ohm load to J4.

g. Adjust R35 for a −7.7dBm ±0.2dB output at J4.

h. Connect rf voltmeter together with 50 ohm load to J3 and connect 50 ohm load to J4. The output at J3 should be −5dBm ±1dB.

i. Repeat steps e. and f.

j. Perform the output level checks in Table 4-8.

Table 4-8. OUTPUT LEVEL CHECKS

J1		J2		J4 OUTPUT
FREQ (MHz)	LEVEL (dBm)	FREQ (MHz)	LEVEL (dBm)	LEVEL (dBm)
150	+5±2	140	−9±0.5	>−14.5
160	+5±2	140	−9±0.5	>−14.5
172	+5±2	140	+1±0.5	>−20
157	+5±2	120	+1±0.5	<−40

k. Disconnect signal generator from J2.

l. Connect rf voltmeter via rf probe to junction of C10, L2, C42.

m. Perform the signal level checks in Table 4-9.

n. Disconnect test equipment and replace module cover.

Table 4-9. SIGNAL LEVEL CHECKS

J1		SIGNAL LEVEL (dBm)
FREQ (MHz)	LEVEL (DBM)	(Junction C10, L2, C42)
169	+2±0.5	+9±2
120	+2±0.5	+9±2
80	+2±0.5	+9±2

4-63. 10 MHz D.U. Main VCO (6160A-4110)

4-64. This module is removed from the synthesizer and aligned with the following equipment:

a. Power Supply (+5V, +14V and −12V)

b. Signal Generator.

c. RF Voltmeter (with rf probe).

d. Digital Voltmeter.

e. Frequency Counter.

f. 50 ohm load.

g. 33k, ¼W Resistor.

h. 39k, ¼W Resistor.

i. 130Ω, ¼W Resistor.

4-65. Figure 4-14 shows adjustment, test point and input/output connector locations on the 10 MHz D.U. Main VCO module. Alignment is as follows:

a. Remove the cover from the module.

b. Apply a 10 MHz signal having a level of 200 ±20mV to TP3.

c. Connect the input of an rf voltmeter (probe) to TP4. Connect probe ground lead to TP2.

d. Adjust C8 for minimum rms voltage at TP3 (less than 2mV).

e. Tune the signal generator from 10 to 19MHz, observing that the rms voltage at TP3 does not exceed 15mV.

f. Disconnect the signal generator and rf voltmeter from the module.

g. Apply dc voltages (+5V, +14V, −12V) to the appropriate feed-thru connectors on the module. Connect power supply common to the module chassis.

h. Jumper "4" and "1" feed-thru connectors to ground.

i. Connect a 130Ω, ¼W resistor between J1 and ground.

j. Connect the rf voltmeter together with a 50 ohm load to J3.

k. Connect the input of a frequency counter to J4.

l. Connect the input of a digital voltmeter to TP1 (+) and TP2 (−).

m. Adjust R3 such that voltage at TP1 transitions between lower and upper levels. This can also be observed via the frequency counter connected to J4.

n. Connect the digital voltmeter input (+) to J1, observing that the voltage is 0 ±10mV dc.

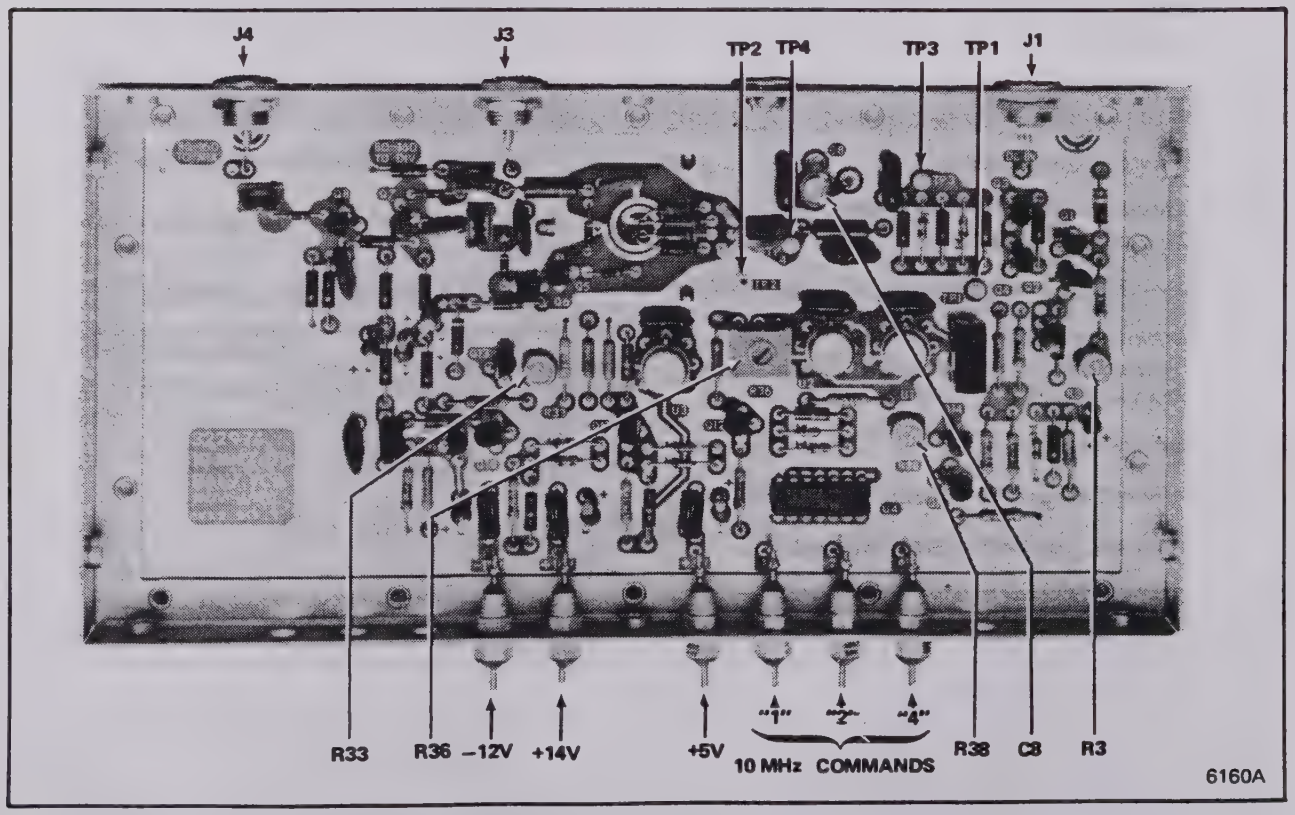

Figure 4-14. ADJUSTMENT, TEST POINT, INPUT/OUTPUT CONNECTOR LOCATIONS (6160A-4110)

o. Repeat steps l. thru n. until results are obtained without further adjustment.

p. Connect the digital voltmeter to TP1 (+) and TP2 (–).

q. Apply –12Vdc via a 33k, ¼W resistor to J1 and jumper "4" "2" "1" feed-thru connectors to ground.

r. Adjust R33 for a 75 MHz +0/–200kHz output at J4. The voltage at TP1 should be greater than +0.5Vdc.

s. Apply +14Vdc via a 39k, ¼W resistor to J1 and then adjust R38 for a 96 MHz ±100 kHz output at J4.

t. Disconnect jumpers from "4" "2" "1" feed-thru connectors and then adjust R36 for a 165 MHz +200 kHz/–0 output at J4. The voltage at TP1 should be less than +11.5V dc.

NOTE!

If voltage at TP1 is not within limits, change length of coils (L11 and L12). Longer coils yield higher voltage. Shorter coil decrease voltage.

u. Perform the frequency tracking checks in Table 4-10. Adjust, as necessary, R33, R38 and R36 per Table 4-11 until tracking limits are met.

Table 4-10. FREQUENCY TRACKING CHECKS

J1 INPUT 1 = 33k, ¼w 2 = 39k, ¼w	GROUND JUMPERS	OUTPUT FREQ. J4 (MHz)
–12V via 1	4, 2, 1	65 to 75
+14V via 2	4, 2, 1	95 to 99
–12V via 1	4, 2	75 to 85
+14V via 2	4, 2	105 to 109
–12V via 1	4, 1	85 to 95
+14V via 2	4, 1	115 to 119
–12V via 1	4	95 to 105
+14V via 2	4	125 to 129
–12V via 1	2, 1	105 to 115
+14V via 2	2, 1	135 to 139
–12V via 1	2	115 to 125
+14V via 2	2	145 to 149
–12V via 1	1	125 to 135
+14V via 2	1	155 to 159
–12V via 1	NONE	135 to 145
+14V via 2	NONE	165 to 169

NOTE: Ensure 130Ω, ¼w resistor is connected from J1 to ground.

Table 4-11. TRACKING LIMIT ADJUSTMENTS

ADJUSTMENT	EFFECT
R33	Changes low frequency (–12V input to J1)
R38	Changes high frequency (+14V input to J1)
R36	Changes maximum frequency (+14V input to J1)

v. Disconnect frequency counter from J4.

w. Apply –12Vdc via a 33k, ¼W resistor to J1 and jumper the following feed-thru connectors to ground, observing that the output signal at J3 is +1.5dBm ±1.5dB.

Feed-Thru

"4" "2" "1"
"4" "2"
"4" "1"
"4"

x. Apply +14Vdc via a 39k, ¼W resistor to J1, and jumper the following feed-thru connectors to ground, observing that the output signal at J3 is +1.5dBm ±1.5dB.

Feed-Thru

"2" "1"
"2"
"1"
NONE

y. Connect the rf voltmeter together with a 50 ohm load to J4 and repeat steps w. and x., observing that the output signal at J4 is +4dBm ±1.5dB.

z. Disconnect test equipment and replace module cover.

4-66. Output Divider (6160A-4111)

4-67. Alignment of this module is done in the synthesizer using the following equipment:

a. Spectrum Analyzer.

b. Counter.

c. Signal Generator.

d. RF Voltmeter.

e. 6dB Pad.

4-68. Figure 4-15 shows adjustment, test point, and input/output connector locations for this module. Alignment of this module is as follows:

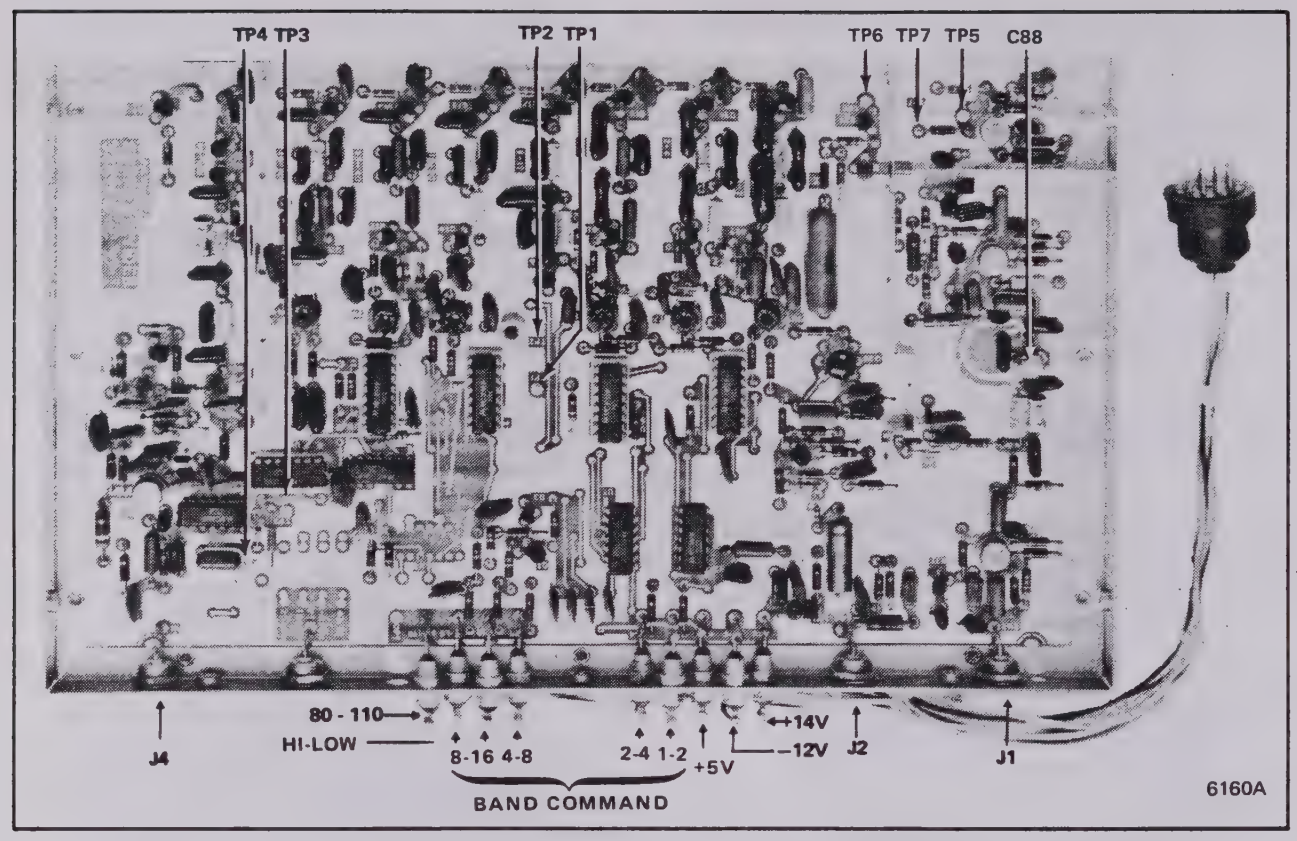

Figure 4-15. ADJUSTMENT, TEST POINT, INPUT/OUTPUT CONNECTOR LOCATIONS (6160A-4111)

NOTE

The –4111 module must be aligned using a Model 6160A for its power supply voltages, command signals, and input signals.

a. Remove module enclosure cover.

b. Connect 4110 OUT (J3) to a 6dB pad. Connect output of 6dB pad to –4111 INPUT (J4).

c. Connect counter to RF OUTPUT connector on front panel.

d. Set front panel controls as follows:

Frequency Dials	150.000000
FUNCTION	10 - 160 MHz
OUTPUT LEVEL	Midposition

e. Remove connections to J1 and J3 on –4109 module. Apply power to the Model 6160A.

f. Note the frequency on the counter. (This frequency is referenced as f_1, in Table 4-12. Perform steps 1 through 6 in Table 4-13 and note frequency on counter.

Table 4-12. OUTPUT DIVIDER CHECKS

STEP NO.	FRONT PANEL DIAL SETTING	COUNTER FREQUENCY
1	79.000000	$f_1/2$
2	39.000000	$f_1/4$
3	19.000000	$f_1/8$
4	07.900000	$f_1/20$
5	03.900000	$f_1/40$
6	01.900000	$f_1/80$

6160A

Table 4-13. OUTPUT DIVIDER LEVEL CHECKS

STEP NO.	MHz DIAL CONTROLS	RF VOLTMETER INDICATION
1	1.00 to 1.99 in 100 kHz steps	+14dbm ±.5dB
2	2.00 to 3.99 in 100 kHz steps	
3	4.00 to 7.99 in 1 MHz steps	
4	8.00 to 11.99 in 1 MHz steps	
5	10.00 to 19.99 in 1 MHz steps	
6	20.00 to 39.99 in 1 MHz steps	
7	40.00 to 79.99 in 10 MHz steps	
8	80.00 to 159.99 in 10 MHz steps	

6160A

g. Set front panel MHz dials to 110.000000 MHz and note frequency on counter. (This frequency will be referenced as f_2).

h. Set front panel MHz dials to 11.000000 MHz. The frequency on the counter must equal $f_2/10$.

i. Remove 6dB pad and connect signal generator to –4111 INPUT (J4).

j. Connect spectrum analyzer to RF OUTPUT connector on front panel.

k. Set front panel MHz dials to 150.000000 and set signal generator to 206.5 MHz at 0dBm.

l. Adjust C88 for a reading of 206.5 MHz on spectrum analyzer.

m. Install module enclosure covers. Install J1 and J3 connections to the –4109 module and connect –4110 OUTPUT (J3) directly to –4110 INPUT (J4).

n. Connect rf voltmeter, with a 50 ohm load, to RF OUTPUT connector on front panel and set MHz dials to 130.000000.

o. Adjust front panel OUTPUT LEVEL full clockwise and adjust R4 on front panel printed circuit assembly for a reading of +14dBm on rf voltmeter.

p. Set the MHz dials on front panel to 01.000000. Perform the checks in Table 4-13.

q. Set front panel controls as follows:

Frequency Dials	01.000000
OUTPUT LEVEL	+3dBm

r. Adjust R6 on front panel printed circuit assembly for a +2dBm indication on the rf voltmeter.

s. Repeat steps 1, through 8, in Table 4-13 and note that rf voltmeter indicates +2dBm ±2dBm.

4-69. Power Supply Regulator Assembly (6160A-4014)

4-70. Alignment of this assembly is accomplished within the synthesizer using the following equipment:

a. Loads
   1. 1.67 ohm, 15W
   2. 12 ohm, 12W
   3. 14 ohm, 14W

b. Digital Voltmeter.

c. Multimeter.

4-71. Figure 4-16 shows adjustment, section, and input/output connector locations for this assembly. Alignment of this assembly is as follows:

a. Remove four (4) screws on the computer board assembly (–4012).

b. Pull the assembly up until hinge locks in place.

c. Connect a digital voltmeter between –12V terminal on the motherboard (–4013) and ground.

d. Apply power and adjust R40 (–12V) for –12V ± 0.001Vdc.

NOTE

R40 is accessible for adjustment from the top of the instrument, through the motherboard assembly –4013.

e. Connect 12 ohm, 12 watt load between –12V terminal on motherboard assembly and ground. Note that the output voltage does not vary more than 0.9 millivolts from previous reading.

f. Disconnect load and connect voltmeter high terminal (+) to the +14V terminal on the motherboard assembly (–4013).

g. Adjust R21 (+14V) for +14V ±0.001Vdc.

NOTE!

R21 is accessible for adjustment from the top of the instrument, through the motherboard assembly –4013.

h. Connect 14 ohm 14 watt load between the +14V terminal on the motherboard assembly (–4013) and ground. Note that the output voltage does not vary more than 1.0 millivolt from previous reading.

i. Disconnect load and connect voltmeter high terminal (+) to the +5V terminal on the motherboard assembly (–4013).

j. Verify that the +5V supply is +5V ±0.02Vdc.

k. Connect 1.67 ohm, 15 watt load between the +5V terminal on the motherboard assembly (–4013) and ground. Note that the output voltage does not vary more than 3.0 millivolts from the previous reading.

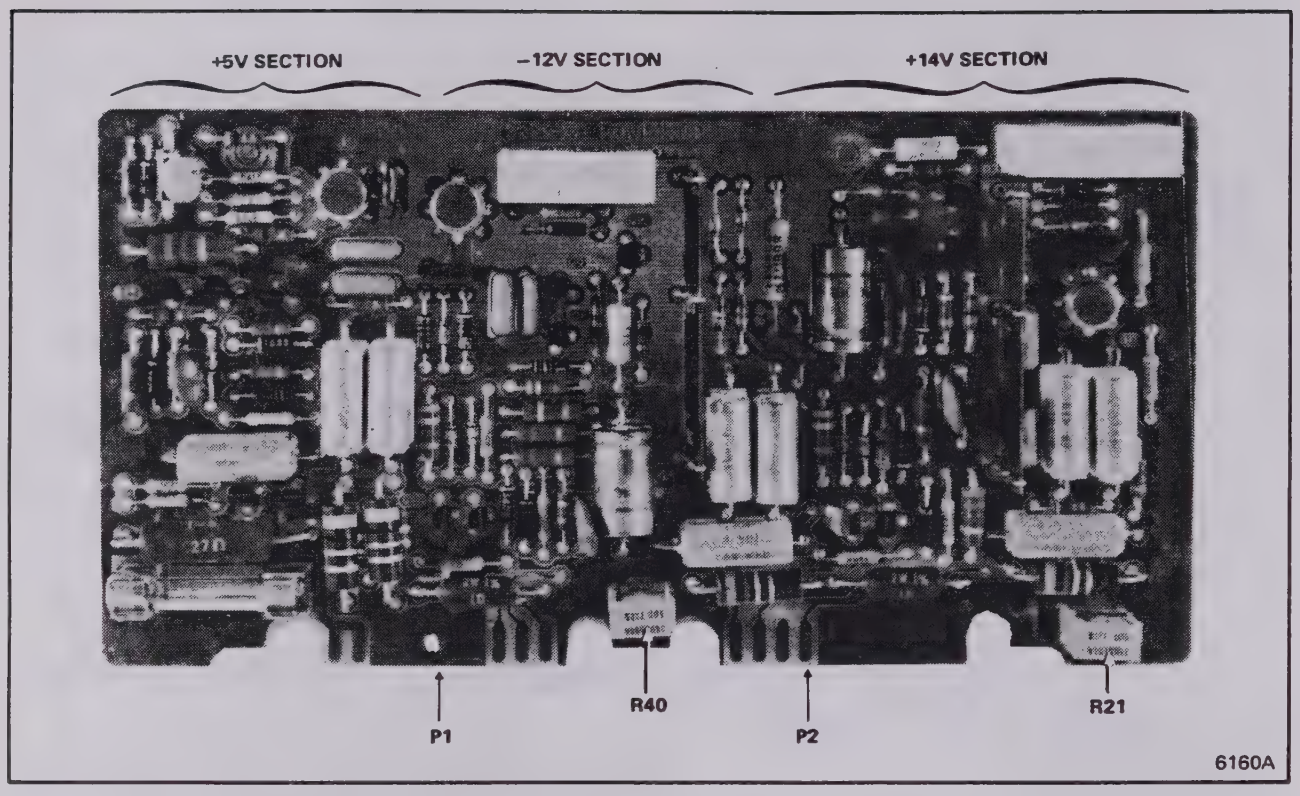

Figure 4-16. ADJUSTMENT, SECTION, INPUT/OUTPUT CONNECTOR LOCATION (6160A-4014)

l. Disconnect load and connect multimeter, set to 10 amp scale, positive terminal (+) to the +5V terminal on the motherboard assembly and the negative terminal (–) to ground.

m. Note that voltage on digital voltmeter goes to 0.5V and current reads approximately 1.8 amps.

n. Remove multimeter and note that the voltage goes to +5V ±0.020Vdc.

o. Repeat steps l, m, and n for the +14V and −12V dc supplies. The digital voltmeter and multimeter must be connected to the respective supplies. Note that in each supply a current reading of approximately 0.5 amp is observed.

4-72. TROUBLESHOOTING

4-73. Troubleshooting of the Model 6160A can be catagorized into two separate conditions: (1) Catastrophic, where no outputs (Buffered 5 MHz output or 1 - 160 MHz output) are present, (2) Synthesizing errors, where incorrect output frequencies are obtained. The first malfunction can usually be attributed to a power supply problem. Isolation of a synthesizing error, however, is somewhat more difficult and may require a thorough understanding of the synthesizer block diagram. It is, therefore, recommended that the contents of Section 3 be thoroughly read and understood. Input/output connectors, test point, and adjustment locations for each module or assembly can be found in the alignment section for each module or assembly.

4-74. Figure 4-17 shows assembly locations of each assembly and module referred to in the troubleshooting chart (Drawing No. 6160A-1600). Drawing No. 6160A-1600, located in the schematic section of this manual, is a troubleshooting chart for the Model 6160A as well as a Model 6160A with the –01, –02, –03 or –04 options. Synthesis OK implies the frequency is synthesized at the desired frequency; i.e., a counter utilizing the same time base used as the 5 MHz reference input for the synthesizer to count within ±1 Hz of the desired frequency. All frequencies in Drawing No. 6160A-1600 are in MHz and are measured without disrupting the path by utilizing the JF207092 and 207100 adaptors and spare cable and BNC Tee and high impedance counter. Always check for proper supply and command voltages as well as rf input signals at the suspected module before removal and disassembly of the module. Tabel 4-14 lists expected output levels at various interface points. Signal levels are typical values and may vary several dB between instruments. Level measurements are made without disrupting the signal path by utilizing the JF207092 and 207100 adaptors and spare cable and BNC-to-scope probe adaptor contained in the service kit (6160A-7006). Coaxline length must be kept at a minimum for the Tee to scope probe.

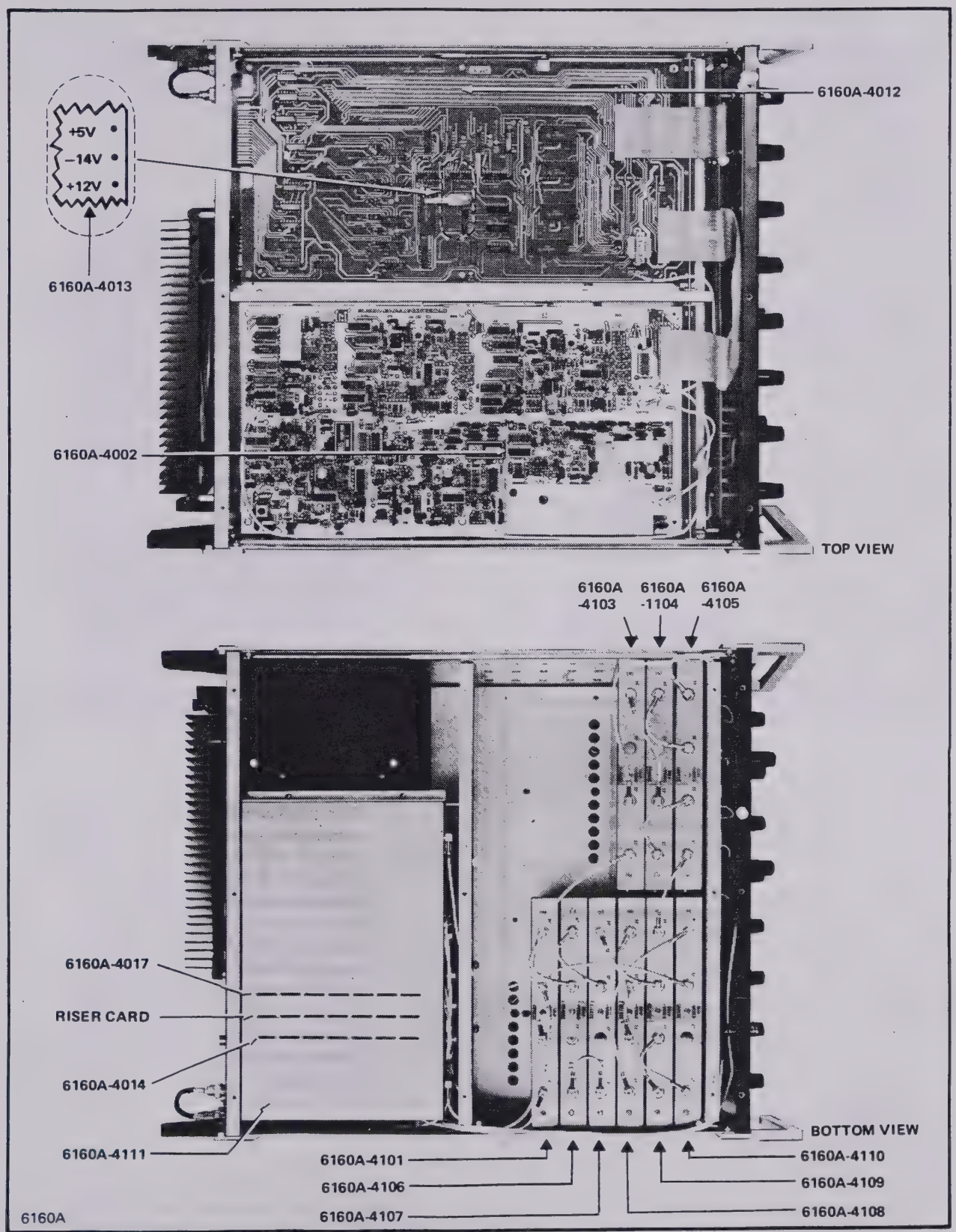

Figure 4-17. MODEL 6160A ASSEMBLY LOCATIONS

Table 4-14. INTERFACE LEVEL

MODULE	JACK	LEVEL
4101	J2 J3 J4	TTL 2V rms open CKT 2V p-p sine wave
4102	J2 J3 J4	TTL TTL 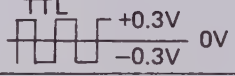
4103	J2 J4	TTL 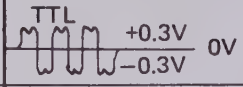
4104	J4	TTL
4105	J1 J2	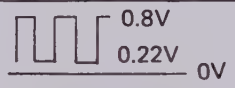 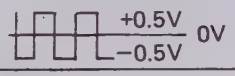
4106	J2 J3	< ±0.01V DC 0.1V ±0.1V or 0.7V ±.1V
4107	J3 J4	250 mV rms sine wave 300 mV rms sine wave
4108	J3 J4	 same as above
4109	J2	DC Voltage < ±0.4V
4110	J3 J4	0.3V rms sine wave 0.3V rms sine wave
4111	J1	1V rms with 1-160 MHz output terminated into 50Ω
4017	J1	TTL

NOTE:

TTL = 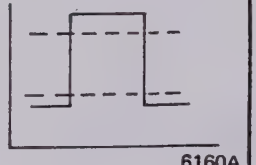

6160A

4-75. Reference to Note A, B, C or D in Drawing No. 6160A-1600, refers to the following notes:

NOTE A!

The −12V supply is used as a reference for the +14 and +5V supplies, therefore, a malfunction on the −12V supplies will make the +14V and +5V supplies inoperative.

NOTE B!

Isolation of 4106-1 and 4107-1 problems. A signal at 4107-1J4 that is more than ±3 MHz from the desired frequency indicates a failure of the 4107-1 module. If the error is less than ±2 MHz the 4106-1 module is probably at fault. Remove connection to 4107-1J1 and check for the best (error frequency) signal of 30-50 mV p-p into 50 ohm and less than 1.5MVdc offset coming from the 4106-1 module. If no beat is present, there is a definite failure of the 4106-1 module. If the beat is present, continue with the following two-step test.

a. Shunt 4107-1J1 with a 120 ohm resistor and remove connection to 4107-1J2. Load this port with a 1 kilohm load. Insert +40μA into J1, (use a 0.35MΩ resistor to +14V supply). Check that frequency at 4107-1J4 is 1.7 to 3.3 MHz above desired frequency and that approximately minus 1.5 to −1.8V is across the 1 kilohm load at 4107-1J2.

b. With resistors installed as in step a., pull minus 40μA from 4107-1J1, (use .3MΩ resistor to −12V supply). Check 4107-1J4 frequency. It must be 1.7 to 3.3 MHz below desired frequency and indicate from +1.0 to +1.2V across the load resistor on 4107-1J2. If conditions described in steps a. and b. are not met the 4107-1 Module is defective. If these conditions are met, the 4106-1 is faulty. The following table, (Table 4-15) indicates desired 4107-1J4 Frequency vs. 10MHz Dial Position.

NOTE C!

Vary the digit indicated by X and check for synthesis at each position of this switch in the case of all digits except the 10MHz digit. For the 10 MHz digit range from 8 to 15.

Table 4-15. 6160A-4107-1. J4 FREQUENCY

10 MHz DIGIT PROGRAMMED	FREQUENCY
8	70 MHz
9	80 MHz
10	90 MHz
11	100 MHz
12	110 MHz
13	120 MHz
14	130 MHz
15	140 MHz

NOTE D!

Isolation of 4109 and 4110 troubles. Open connection to 4110-J1. Voltage at J1 must be less than ±0.4V. Apply 1.4mA with a 10 kilohm resistor from the +14V supply into 4110-J1. Frequency at 4110-J3 must be higher than the 10MHz dial setting by 15 MHz. Remove resistor to +14V supply and connect to −12V supply to draw 1.2mA from 4110-J1. Frequency at 4110-J3 must be lower than 10 MHz dial setting by 5 MHz. If these conditions are not met the fault is in the 4110 module. If these conditions are met, the fault is likely in the 4109 Module.

4-82. The following tables (Table 4-16 and Table 4-17) list the voltages present on C1, C2, C3, and J13 of the −4013 Mother Board Assembly referenced in Drawing No. 6160A-1600.

Table 4-16. J13, AC VOLTAGE

PIN	AC VOLTAGE	PIN	AC VOLTAGE
1	0	6	19.5 ±15%
2	0	7	9.4 ± 15%
3	19.5 ±15%	8	9.4 ± 15%
4	0	9	9.4 ± 15%
5	0	10	9.4 ± 15%

Notes: 1. *AC voltages measured with 115 ±3% ac line voltage*

2. *Gain access to J13 by removing top cover and hinging up 4102 module after removing the four screws securing it to synthesizer.*

Table 4-17. UNREGULATED SUPPLY VOLTAGES

TEST POINT	VDC
C3 (+) terminal	+ 25.2 ± 15%
C2 (−) terminal	−25.4 ± 15%
C1 (+) terminal	+11.7 ± 15%

Notes: 1. *AC voltages measured with 115 ±3% ac line voltage.*

2. *Gain access to test poinst by removing top cover and hinging up the 4102 module after removing the four screws securing it to the synthesizer.*

Section 5

Lists of Replaceable Parts

REFERENCE DESIGNATOR	ASSEMBLY NAME/NUMBER	PART NO.	PAGE
	Frequency Synthesizer Final Assembly (6160A)	6160A	5-3
A1	Front Panel Assembly (6160A-4451)	324814	5-11
A1A1	Front Panel PCB Assembly (6160A-4051-03)	323162	5-13
A2	10 MHz Main Loop VCO Module Assembly (6160A-4110) .	323741	5-15
A2A1	10 MHz Main Loop VCO PCB Assembly (6160A-4010) . .	–	5-16
A3	10 MHz Main Loop Phase Detector Module Assembly (6160A-4109)	323733	5-20
A3A1	10 MHz Main Loop Phase Detector PCB Assembly (6160A-4009)	–	5-21
A4	10 MHz IF Mixer Module Assembly (6160A-4108) . . .	323725	5-26
A4A1	10 MHz IF Mixer PCB Assembly (6160A-4008)	–	5-27
A5	10 MHz Step Loop VCO Module Assembly (6160A-4107-1)	341545	5-32
A5A1	10 MHz Step Loop VCO PCB Assembly (6160A-4007) . .	–	5-33
A6	10 MHz Step Loop Phase Detector Module Assembly (6160A-4106-1)	341537	5-39
A6A1	10 MHz Step Loop Phase Detector PCB Assembly (6160A-4006)	–	5-40
A7	Input Filter Module Assembly (6160A-4101)	323667	5-46
A7A1	Input Filter PCB Assembly (6160A-4001)	–	5-47
A8	1 MHz Step Loop Module Assembly (6160A-4103) . . .	323675	5-50
A8A1	1 MHz Step Loop PCB Assembly (6160A-4003)	–	5-51
A9	1 MHz I.F. Mixer Module Assembly (6160A-4104) . . .	323683	5-56
A9A1	1 MHz I.F. Mixer PCB Assembly (6160A-4004)	–	5-57
A10	1 MHz Main Loop Module Assembly (6160A-4105) . . .	323691	5-60
A10A1	1 MHz Main Loop PCB Assembly (6160A-4005)	–	5-61
A11	Output Divider Module Assembly (6160A-4111)	323758	5-65
A11A1	Output Divider PCB Assembly (6160A-4011)	–	5-66
A12	Power Supply PCB Assembly (6160A-4014)	322933	5-76
A13	Riser PCB Assembly (6160A-4015)	323147	5-81

REFERENCE DESIGNATOR	ASSEMBLY NAME/NUMBER	PART NO.	PAGE
A14	Resolution Extender PCB Assembly, –03 Option (6160A-4017)	323303	5-82
A15	Internal Frequency Standard Assembly (6160A-4018)		
	Option –01	315432	5-86
	Option –02	315440	5-86
A16	1 - 100 kHz Digit Unit PCB Assembly (6160A-4002)	322842	5-88
A17	Computer PCB Assembly (6160A-4012)	322958	5-105
A18	Mother Board PCB Assembly (6160A-4013)	356295	5-108
A19	Transformer Enclosure Assembly (6160A-4116)	323493	5-109
A20	Rear Panel Assembly (6160A-4452)	324616	5-111
A21	Heat Sink Assembly (6160A-4021)	323154	5-113

5-1. INTRODUCTION

5-2. This section contains an illustrated parts breakdown of the instrument. Components are listed alphanumerically by assembly. Electrical components are listed by item number. Each listed part is shown in an accompanying illustration.

5-3. Parts lists include the following information:

a. Reference Designation or Item Number.

b. Description of each part.

c. Fluke Stock Number.

d. Federal Supply Code for Manufacturers. (See Section 7 for Code-to-Name list.)

e. Manufacturer's Part Number or Type.

f. Total Quantity per assembly of component.

g. Recommended Quantity: This entry indicates the recommending number of spare parts necessary to support one to give instruments for a period of two years. This list presumes an availability of common electronic parts at the maintenance site. For maintenance for one year or more at an isolated site, it is recommended that at least on of each assembly in the instrument be stocked. In the case of optional sub-assemblies, plug-ins, etc. that are not always part of the instrument, or are deviations from the basic instrument model, the REC QTY column lists the recommended quantity of the item in that particular assembly.

h. Use Code is provided to identify certain parts that have been added, deleted or modified during production of the instrument. Each part for which a use code has been assigned may be identified with a particular instrument serial number by consulting the Use Code Effectivity, paragraph 5-7.

5-4. HOW TO OBTAIN PARTS

5-5. Components may be ordered directly from the manufacturer by using the manufacturer's part number, or from the John Fluke Mfg. Co., Inc. factory or authorized representative by using the FLUKE STOCK NUMBER. In the event the part you order has been replaced by a new or improved part, the replacement will be accompanied by an explanatory note and installation instructions, if necessary.

5-6. To ensure prompt and efficient handling of your order, include the following information:

a. Quantity.

b. FLUKE Stock Number.

c. Description.

d. Reference Designation or Item Number.

e. Printed Circuit Board Part Number.

f. Instrument Model and Serial Number.

5-7. USE CODE EFFECTIVITY LIST

USE CODE	SERIAL NUMBER EFFECTIVITY

FINAL ASSEMBLY

REF DESIG OR ITEM NO.	DESCRIPTION	FLUKE STOCK NO.	MFG FED SPLY CDE	MFG PART NO. OR TYPE	TOT QTY	REC QTY	USE CDE
	6160A INSTRUCTION MANUAL **FREQUENCY SYNTHESIZER FINAL ASSEMBLY** **Figure 5-1 Sheets 1, 2, 3**	338392 6160A	89536	338392	1		
A1	Front Panel Assembly 6160A-4451	324814	89536	324814	1		
A2	10 MHz Main Loop VCO Module Assembly 6160A-4110	323741	89536	323741	1		
A3	10 MHz Main Loop Phase Detector Module Assembly 6160A-4109	323733	89536	323733	1		
A4	10 MHz IF Mixer Module Assembly 6160A-4108	323725	89536	323725	1		
A5	10 MHz Step Loop VCO Module Assembly 6160A-4107-1	341545	89536	341545	1		
A6	10 MHz Step Loop Phase Detector Module Assembly 6160A-4106-1	341537	89536	341537	1		
A7	Input Filter Module Assembly 6160A-4101	323667	89536	323667	1		
A8	1 MHz Step Loop Module Assembly 6160A-4103	323675	89536	323675	1		
A9	1 MHz I.F. Mixer Module Assembly 6160A-4104	323683	89536	323683	1		
A10	1 MHz Main Loop Module Assembly 6160A-4105	323691	89536	323691	1		
A11	Output Divider Module Assembly 6160A-4111	323758	89536	323758	1		
A12	Power Supply PCB Assembly 6160A-4014	322933	89536	322933	1		
A13	Riser Card, PCB 6160A-4015	323147	89536	323147	1		
A17	Computer PCB Assembly 6160A-4012	322958	89536	322958	1		
A18	Mother Board PCB Assembly 6160A-4013	322941	89536	322941	1		
A19	Transformer Assembly 6160A-4116	323493	89536	323493	1		
A20	Rear Panel Assembly 6160A-4452	324616	89536	324616	1		
A21	Heat Sink Assembly 6160A-4021	323154	89536	323154	1		
C1	Cap, elect, 15,000 uf, 15V	310367	06001	86F520	1		
C2,C3	Cap, elect, 2900 uf −10/+75%, 40V	325779	06001	86F555	2		

FINAL ASSEMBLY

REF DESIG OR ITEM NO.	DESCRIPTION	FLUKE STOCK NO.	MFG FED SPLY CDE	MFG PART NO. OR TYPE	TOT QTY	REC QTY	USE CDE
22	Screw, 6 - 32 x ¼, FLH - Phillips 82° undercut	268169	73734	Order by Description	4		
23	Screw, 6 - 32 x ¼, lock-type SEMS	178533	73734	Order by Description	14		
24	Screw, 6 - 32 x 3/8 lock-type SEMS	177022	73734	Order by Desctiption	3		
26	Screw, 8 - 32 x ¼ PNH - Phillips	228890	73734	19063	2		
27	Screw, 8 - 32 x 3/8 FTH - Phillips	114116	73734	18264	8		
28	Screw, 8 - 32 x ½ FTH - Phillips	114355	73734	18266	10		
29	Tie, cable	172080	06383	SST-1	1		
30	Washer, lock, internal #4	110403	73734	99402	18		
	NOTE! *The following items 32 through 63 can be found in Figure 5-1, Sheet 3 of 3.*						
32	Bracket, stiffener	356311	89536	356311	1		
33	Bracket, hinge, left-hand	356337	89536	356337	1		
34	Bracket, hinge, right-hand	367466	89536	367466	1		
35	Cable –23, black	367391	89536	367391	1		
36	Cable –16, violet	367326	89536	367326	1		
37	Cable –15, red	367318	89536	367318	1		
38	Cable –17, yellow	367334	89536	367334	1		
39	Cable –22, brown	367383	89536	367334	1		
40	Cable –21, orange	367375	89536	367375	1		
41	Cable –20, blue	367367	89536	367367	1		
42	Cable –19, green	367359	89536	367359	1		
43	Cable –18, white	367342	89536	367342	1		
44	Cable –12, violet	367284	89536	367284	1		
45	Cable –13, yellow	367292	89536	367292	1		
46	Cable –11, red	367276	89536	367276	1		
47	Cable –14, green	367300	89536	367300	1		

10 MHz STEP LOOP PHASE DETECTOR PCB ASSEMBLY, A6A1

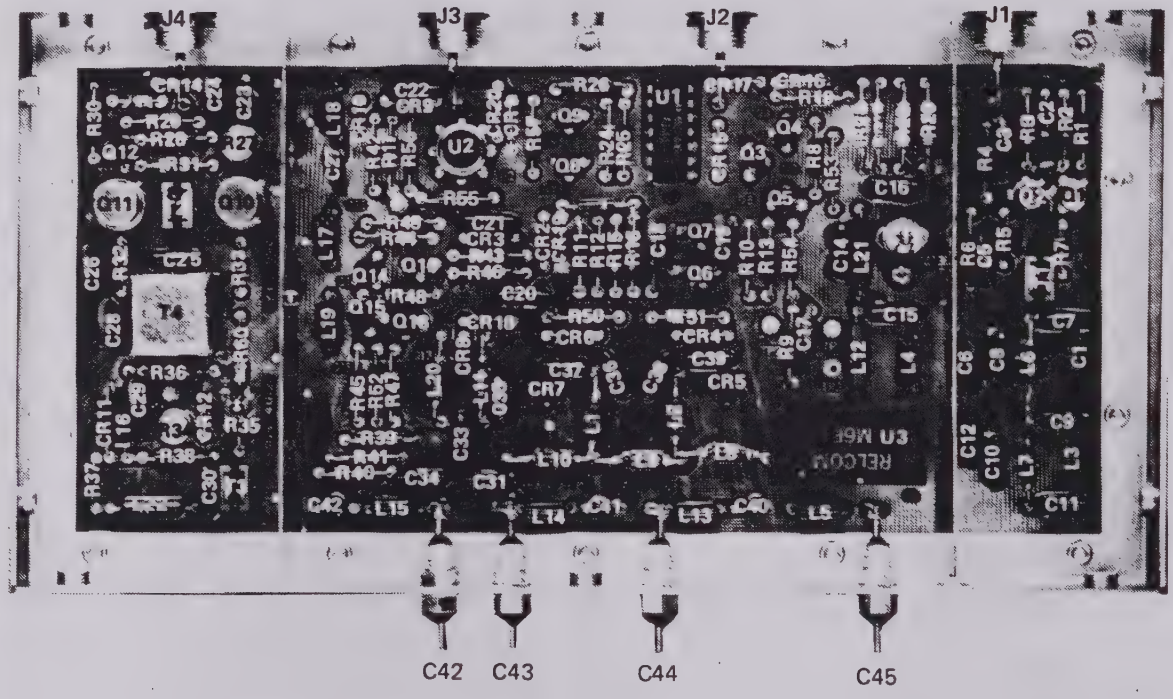

Figure 5-13. 10 MHz STEP LOOP PHASE DETECTOR PCB ASSEBMLY, A6A1

FINAL ASSEMBLY

REF DESIG OR ITEM NO.	DESCRIPTION	FLUKE STOCK NO.	MFG FED SPLY CDE	MFG PART NO. OR TYPE	TOT QTY	REC QTY	USE CDE
	Cable, # 22	328534	89536	328534	1		
	Cable, # 23	333096	89536	333096	1		
	Cable, # 24	270264	89536	270264	1		
	Cable, # 25	205773	89536	205773	1		
	Screw, PNH, 6 - 32 x ¼ (Secures Computer PCB and Six-Digit Generator Module)	152140	73734	19042	6		
	Accessory Kit	324913	89536	324913	1		

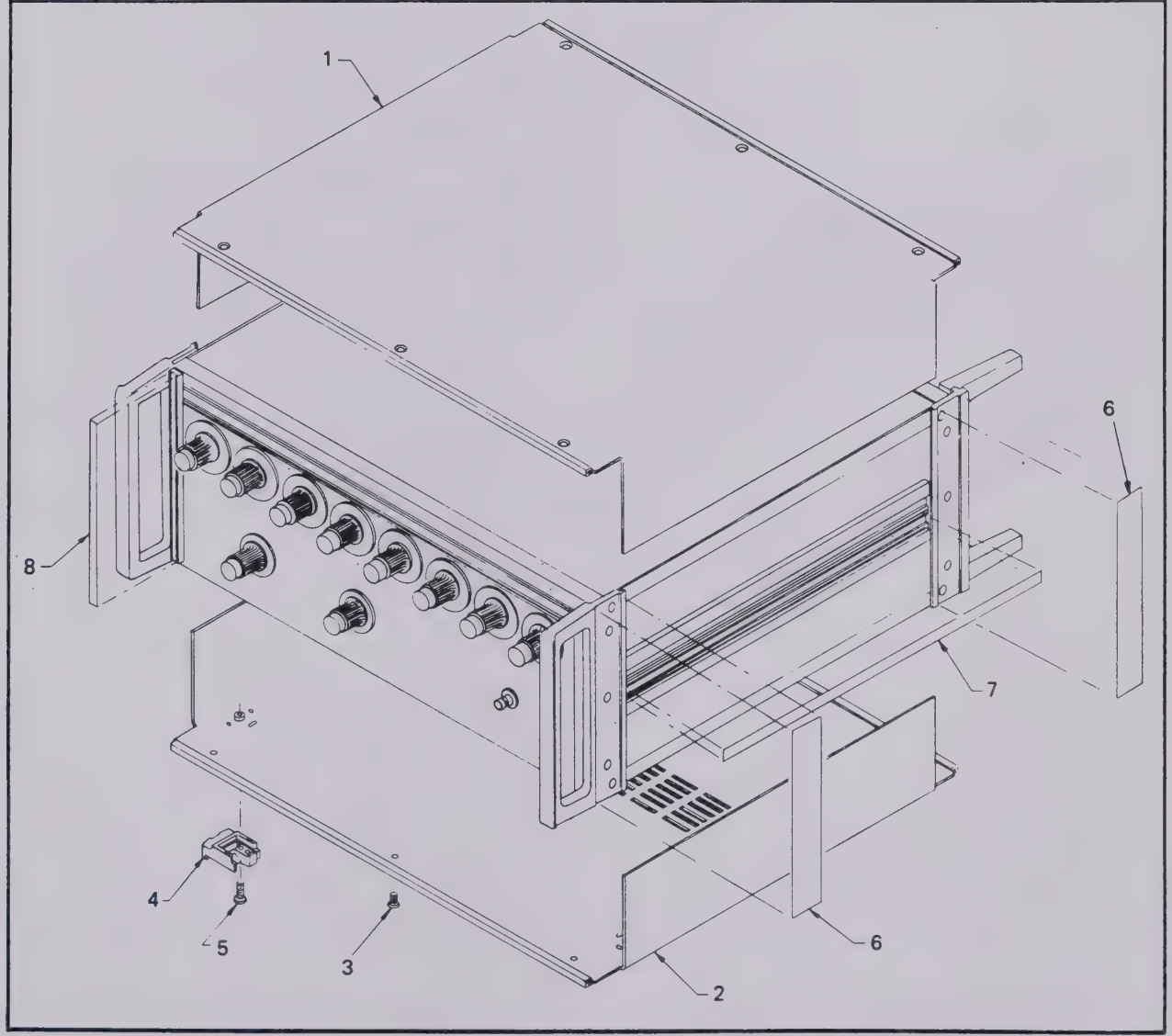

Figure 5-1. (1 of 3) FINAL ASSEMBLY

FINAL ASSEMBLY

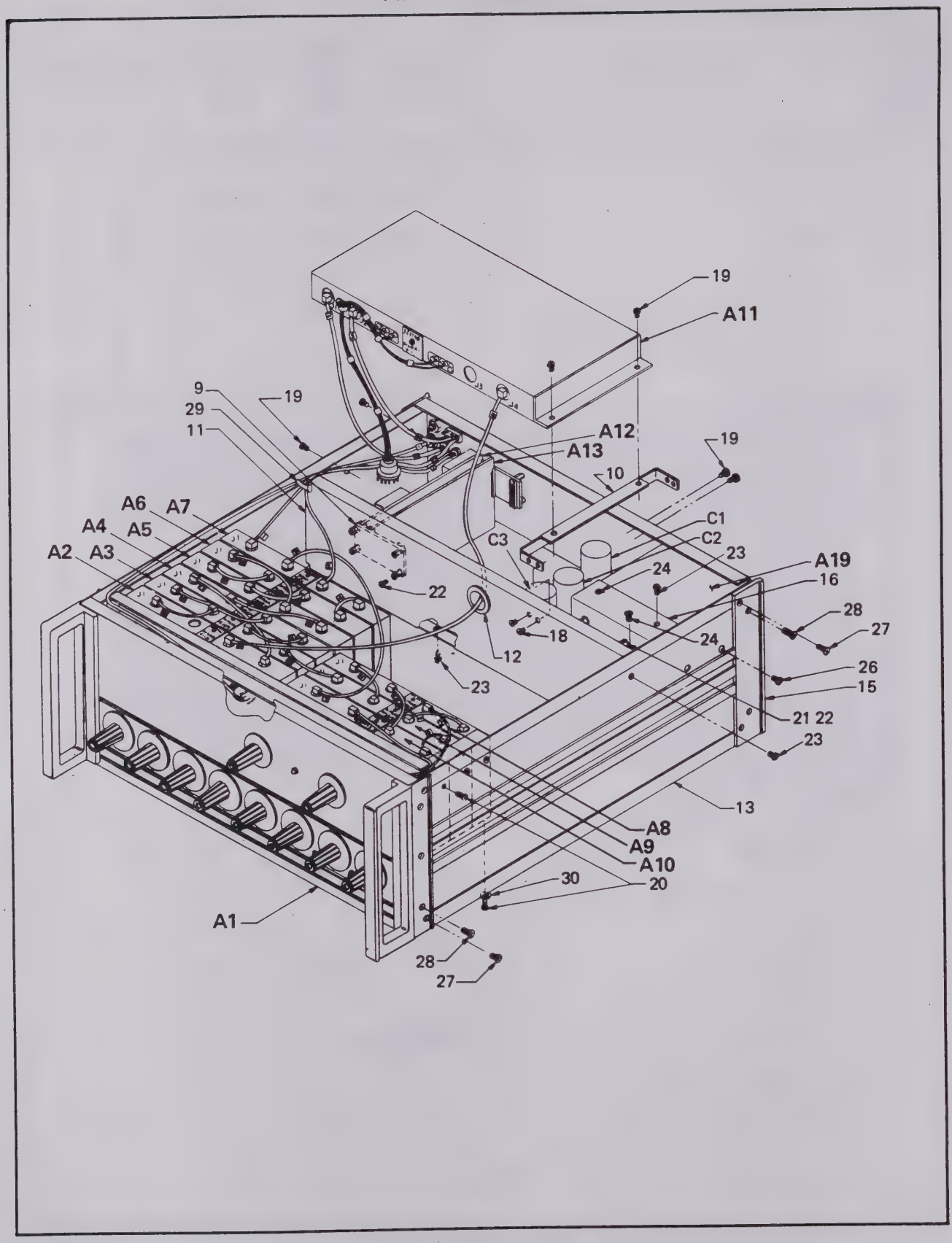

Figure 5-1. (2 of 3) FINAL ASSEMBLY

FINAL ASSEMBLY

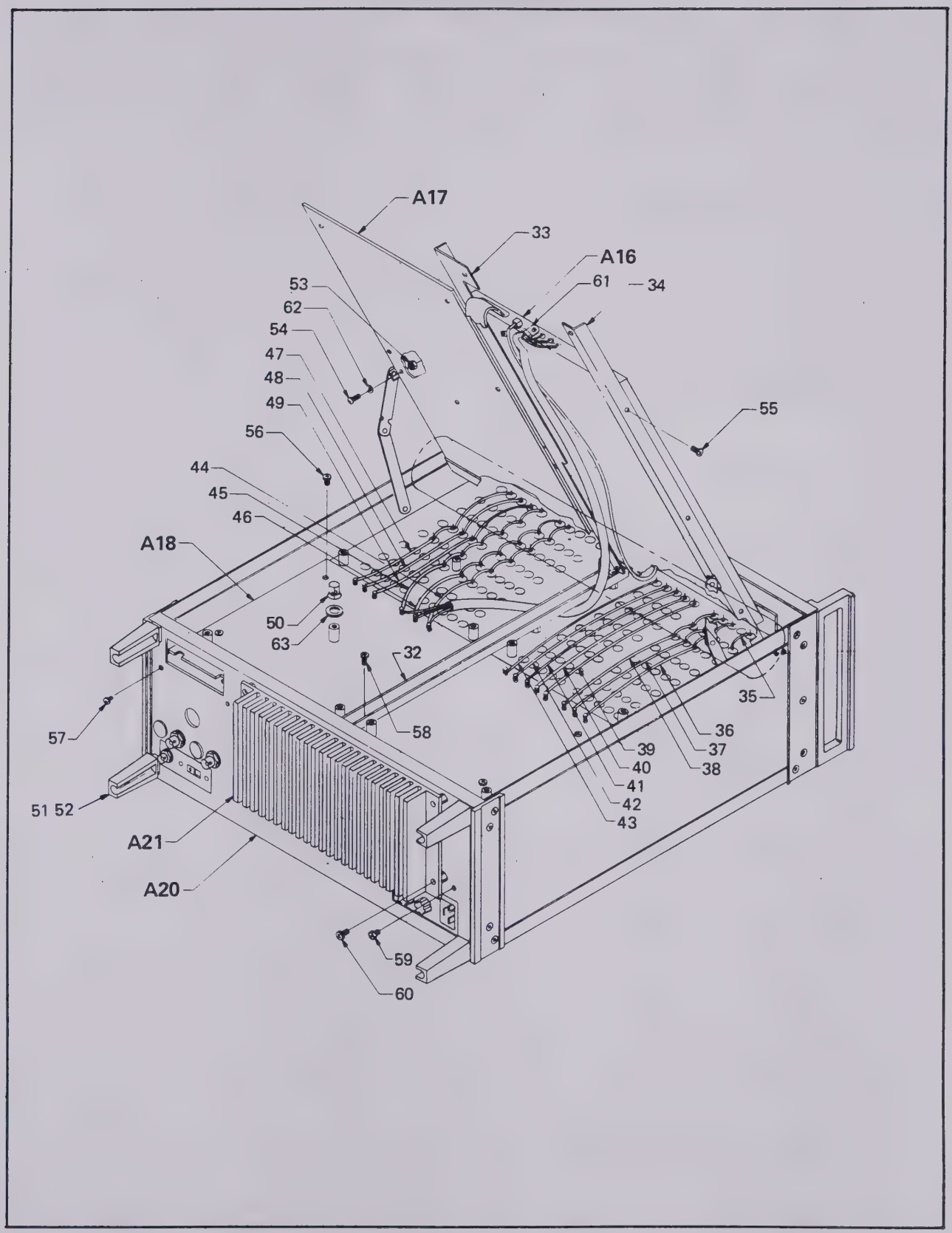

Figure 5-1. (3 of 3) FINAL ASSEMBLY

FRONT PANEL ASSEMBLY, A1

REF DESIG OR ITEM NO.	DESCRIPTION	FLUKE STOCK NO.	MFG FED SPLY CDE	MFG PART NO. OR TYPE	TOT QTY	REC QTY	USE CDE
A1	**FRONT PANEL ASSEMBLY** **Figure 5-2 6160A-4451**	324814	89536	324814	REF		
A1A1	Front Panel PCB Assembly	323162	89536	323162	1		
A1A1 CR2 thru A1A1 CR13	Diode, Ge, 80 mA, 100 piv (Note: A1A1CR2 thru A1A1CR13 are located on Front Panel PCB Assembly, A1A1. When ordering A1A1 assembly, A1A1CR2 thru A1A1CR13 must be ordered separately) (Option –03 only)	149187	98332	1N270	12	2	
CR1 thru CR4	Diode, light emitting	309617	71318	FLV102	4	1	
A1A1 S1 thru A1A1 S3	Switch, rotary (Note: A1A1S1 thru A1A1S3 are located on Front Panel PCB Assembly, A1A1. When ordering A1A1 assembly, A1A1S2 thru A1A1S3 must be ordered separately) (Option –03 only)	321091	89536	321091	3		
1	Bracket, corner angle	329151	89536	329151	2		
2	Cable Assembly, rf output	328534	89536	328534	1		
3	Clip, snap-in, with speed nut	309625	07263	FYC001T	4		
6	Handle, front corner	295675	89536	295675	2		
7	Knob Assembly, 0-9 positions	324863	89536	324863	4		
	Knob Assembly, 0-9 positions (Option –03 only)	324863	89536	324863	3		
8	Knob Assembly, 1-15 positions	324855	89536	324855	1		
9	Knob Assembly	324848	89536	324848	2		
10	Name plate	194183	89536	194183	1		
11	Nut, # 6 hex	110569	73734	8005	4		
12	Panel, screened front	323188	89536	323188	1		
13	Screw, cap, # 8 - 32 x 7/16	295105	74445	8-32 UNRC CLASS 3A	4		
14	Screw, # 4 - 40 x 3/16, FHD, Phillips	293589	73734	4-40 x 3-16FHD /PHH BLK0X	4		
15	Spacer, 1/8 in.	215210	89536	215210	8		

FRONT PANEL ASSEMBLY, A1

REF DESIG OR ITEM NO.	DESCRIPTION	FLUKE STOCK NO.	MFG FED SPLY CDE	MFG PART NO. OR TYPE	TOT QTY	REC QTY	USE CDE
16	Spacer, 3/16 in.	103499	89536	103499	1		
17	Washer, internal lock	110338	30323	#6	4		
18	Nut, KEP, #6 - 32	152819	78199	51106180000	1		

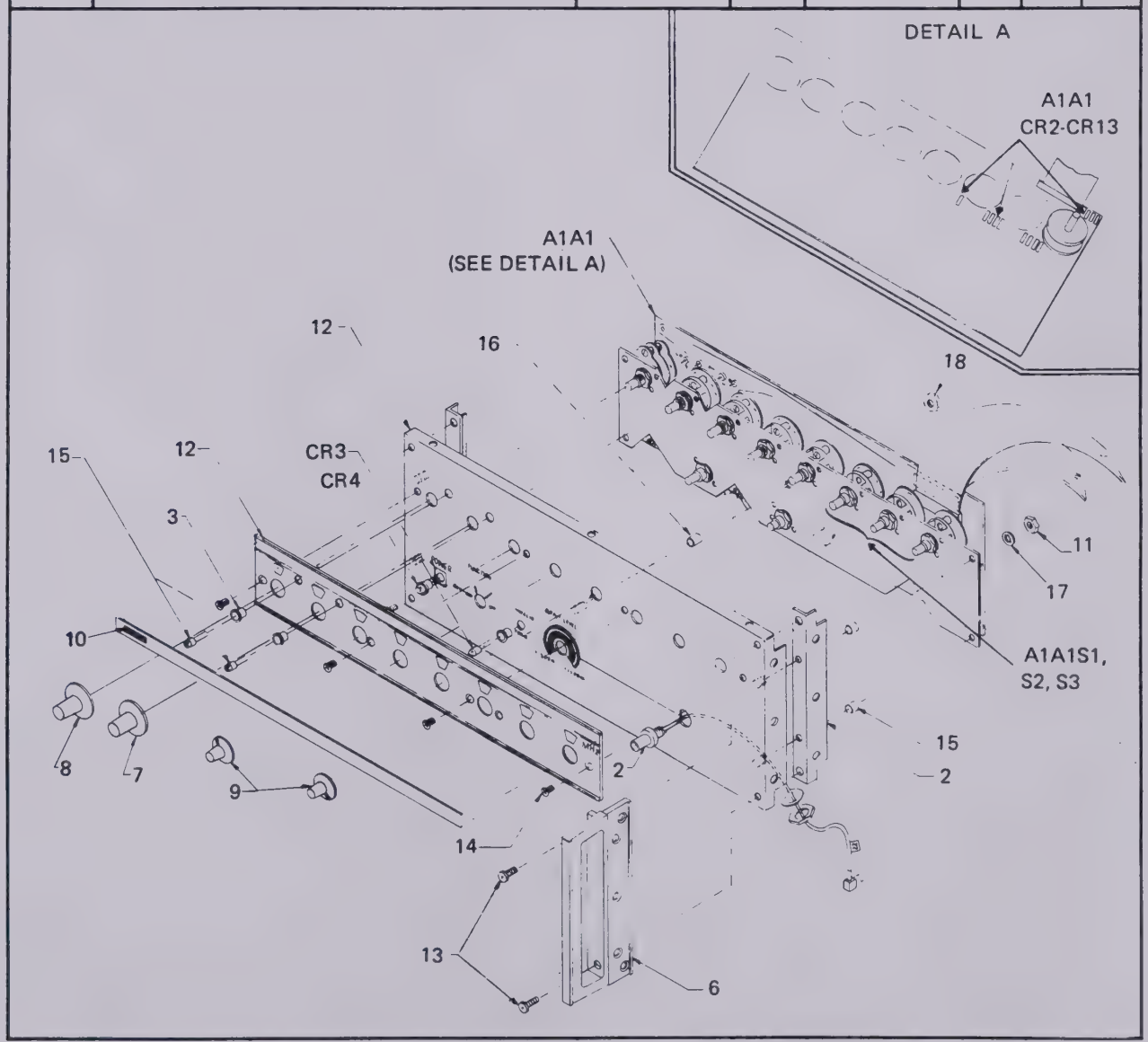

Figure 5-2 FRONT PANEL ASSEMBLY, A1

FRONT PANEL PCB ASSEMBLY, A1A1

REF DESIG OR ITEM NO.	DESCRIPTION	FLUKE STOCK NO.	MFG FED SPLY CDE	MFG PART NO. OR TYPE	TOT QTY	REC QTY	USE CDE
A1A1	**FRONT PANEL PCB ASSEMBLY** **Figure 5-3 6160A-4051**	323162	89536	323162	1		
C1	Cap elect, 250 uf, +50/-10%, 16V	187765	73445	ET331X016A00	1		
CR1	Not used						
CR2 thru CR13	**NOTE!** *CR2 thru CR13 not included on this assembly. When ordering the A1A1 Assembly, these diodes must be ordered separately. Refer to A1A1 CR2 thru A1A1CR13 under A1 Front Panel Assembly parts list for part number.*						
CR14 thru CR33	Diode, germanium, 80 mA, 100 piv	149187	93332	1N270	20		
J1,J2	Connector, PCB to cable	295337	35037	Type 3402	1		
P1, P2	Plug, cable to PCB (not illustrated)	325910	35037	3424	2		
R1, R2	Res, comp, 680Ω, ±5%, ¼W	148007	01121	CB6815	2		
R3	Res, comp, 51Ω, ±5%, ¼W	221879	01121	CB5105	1		
R4	Res, var, cermet, 5k, ±10%, ½W	288282	71450	360S-502A	1		
R5	Res, comp, 6.2k, ±5%. ¼W	221911	01121	CB6225	1		
R6	Res, var, cermet, 2k, ±10%. ½W	285163	11236	360S-202A	1		
R7	Res, var, comp, 1k, ±5%, 2W	255752	80294	3852A-281-102H	1		
R8	Res, comp, 3.9k, ±5%. ¼W	148064	01121	CB 3925	1		
R9, R10	Res, comp, 330Ω, ±5%, ¼W	147967	01121	CB3315	2		
S1 thru S3	**NOTE!** *S1 thru S3 not included on this assembly. When ordering the A1A1 assembly, these switches must be ordered separately. Refer to A1A1S1 thru A1A1S3 under A1 Front Panel Assembly parts list for part number.*						
S4 thru S7	Switch, rotary, 10 position	321091	89536	321091	4		

FRONT PANEL PCB ASSEMBLY, A1A1

REF DESIG OR ITEM NO.	DESCRIPTION	FLUKE STOCK NO.	MFG FED SPLY CDE	MFG PART NO. OR TYPE	TOT QTY	REC QTY	USE CDE
S8	Switch, rotary, 15 position	321133	89536	321133	1		
S9	Switch, rotary, 4 position	321190	89536	321190	1		
U1	IC, DTL, quad-2 input NOR gate	320689	04713	MC1811P	1		
1	Cover, connector, J1 and J2	295329	35037	TYPE 3402	2		
	Cable, flat	291807	35037	3350	6 in		
	Cable, flat	291807	35037	3350	4 in		
	Nut, hex, 3/8 x 32	110510	73734	3/8 -32NEF2B	7		
	Plate, switch mounting	323428	89536	323428	1		
	Washer, internal lock, 3/8 in.	129957	78189	1220 - 05	7		

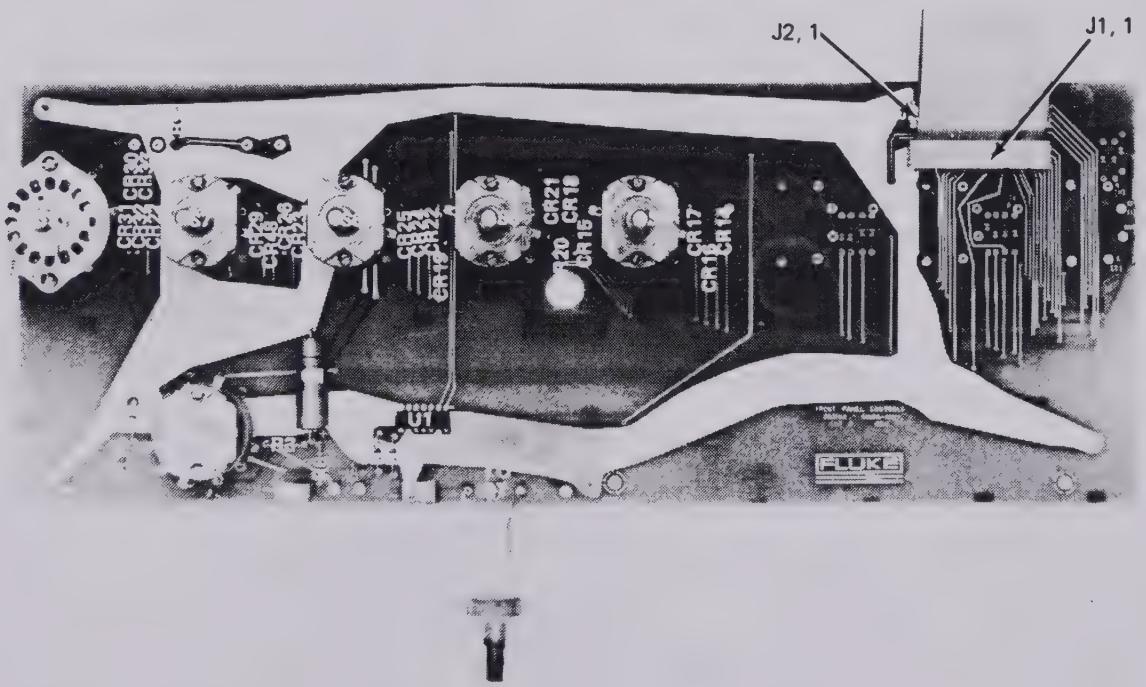

Figure 5-3. FRONT PANEL PCB ASSEMBLY, A1A1

10 MHz MAIN LOOP VCO MODULE ASSEMBLY, A2

REF DESIG OR ITEM NO.	DESCRIPTION	FLUKE STOCK NO.	MFG FED SPLY CDE	MFG PART NO. OR TYPE	TOT QTY	REC QTY	USE CDE
A2	**10 MHz MAIN LOOP VCO MODULE ASSEMBLY** **Figure 5-4 6160A-4110**	323741	89536	323741	REF		
A2A1	10 MHz Main Loop VCO PCB Assembly				1		
1	Module cover, inner	323204	89536	323204	1		
2	Module cover, outer	323212	89536	323211	1		
3	Screw, 4 - 40 x ¼ PNH - Phillips	129890	73734	19022	7		
4	Nameplate	329243	89536	329243	1		

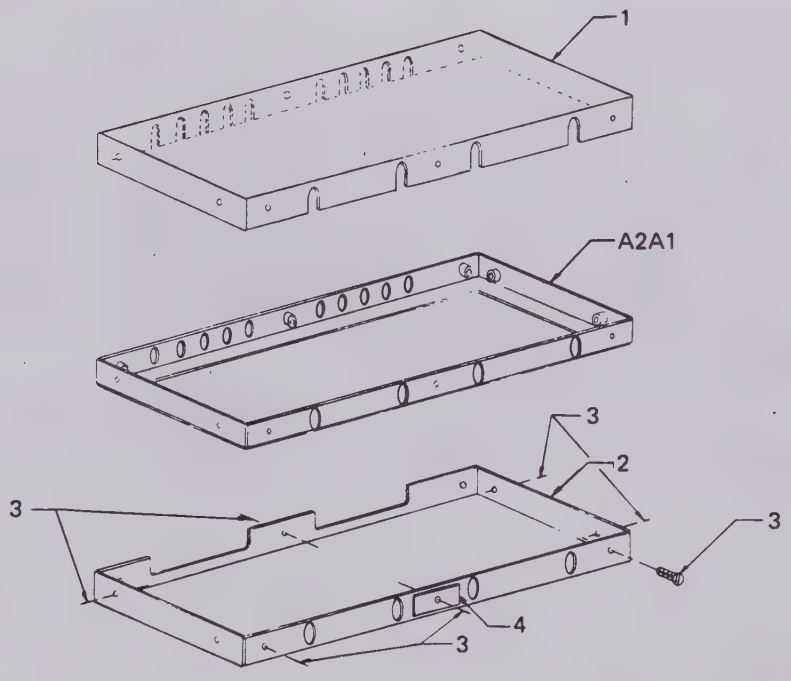

Figure 5-4. 10 MHz MAIN LOOP VCO MODULE ASSEMBLY, A2

10 MHz MAIN LOOP VCO PCB ASSEMBLY, A2A1

REF DESIG OR ITEM NO.	DESCRIPTION	FLUKE STOCK NO.	MFG FED SPLY CDE	MFG PART NO. OR TYPE	TOT QTY	REC QTY	USE CDE
A2A1	**10 MHz MAIN LOOP VCO PCB ASSEMBLY** **Figure 5-5 6160A-4010**				REF		
C1 thru C5, C12, C15, C17	Cap, ta, 2.2 uf ±20%, 20V	161927	56289	196D225X0020	8		
C6	Cap, plstc, 0.033 uf ±10%, 50V	271841	06001	75F1R5A334	1		
C8	Cap, var cer, 4.5 to 50 pf + 70/-20%, 250V	321117	73899	DVJ305A	1		
C9	Cap, mica, 330 pf ±1%, 500V	226142	53021	D15F331F	1		
C10	Cap, mica, 39 pf ±5%, 500V	148544	53021	D15E390J	1		
C11	Cap, mica, 430 pf ±5%, 500V	177980	53021	D15F431J	1		
C13, C16, C19	Cap, cer, 0.05 uf +80/-20%, 25V	148924	72982	5855-Y5U-5032	3		
C14, C18	Cap, cer, 0.0012 uf ±10%, 500V	106732	71590	CF-122	2		
C20, C21, C22	Cap, mica, 33 pf ±5%, 500V	160317	53021	D15E330J	3		
C23 thru C28	Cap, feed thru, 2500 pf, 500V	248286	04222	BSF-188	6		
CR1, CR2, CR3, CR8 thru CR13	Diode, silicon, 150 mA	203323	03508	1N4148	9	2	
CR4 thru CR7	Diode, tuning,hyper abrupt	320200	KEV Elec-tronics	TYPE KV 2001	4	1	

10 MHz MAIN LOOP VCO PCB ASSEMBLY, A2A1

REF DESIG OR ITEM NO.	DESCRIPTION	FLUKE STOCK NO.	MFG FED SPLY CDE	MFG PART NO. OR TYPE	TOT QTY	REC QTY	USE CDE
J1, J2 J4	Connector, male, coaxial	207639	13511	27 - 875	3		
L1,L2 L3,L11	Bead, 6 turn	320911	89536	320911	4		
L5	Inductor, 3.9 uh ±10%, 815 mA	328054	24759	MR3.9	1		
L6	Bead, ferrite	219535	02114	56-060-85-3B	1		
L7	Inductor, 1 uh ±10%, 2080 mA	320952	24759	MR1.0	1		
L8, L9 L10	Inductor	320903	89536	320903	3		
Q1, Q2, Q10 thru Q13	Xstr, Si, NPN	218396	04713	2N3904	6	2	
Q3, Q4 Q9, Q14, Q15	Xstr, Si, PNP	195974	04713	2N3906	5	1	
Q5, Q6, Q7, Q8	Xstr, Si, NPN	248351	04713	MPS918	4	1	
R1	Res, comp, 39Ω ±5%, ¼W	193391	01121	CB3905	1		
R2	Res, met flm, 4.99k 1%, 1/8W	168252	91637	MFF1- 84-991F	1		
R3, R38	Res, var, cermet, 2k ±20%, ½W	226076	19701	ET50W202	2		
R4	Res, comp, 6.8k ±5%, ¼W	148098	01121	CB6825	1		
R5,R6	Res, met flm, 499Ω ±1%, 1/8W	168211	91637	MFF1-84990F	2		
R7	Res, met flm, 6.49k ±1%, 1/8W	294900	91637	MFF1-86-491F	1		
R8, R23	Res, comp, 2.7k ±5%, ¼W	170720	01121	CB2725	2		
R9 R21, R42, R48	Res, comp, 100Ω ±5%, ¼W	147926	01121	CB1015	4		
R10, R11, R22	Res, comp, 2.2k ±5%, ¼W	148049	01121	CB2225	3		

10 MHz MAIN LOOP VCO PCB ASSEMBLY, A2A1

REF DESIG OR ITEM NO.	DESCRIPTION	FLUKE STOCK NO.	MFG FED SPLY CDE	MFG PART NO. OR TYPE	TOT QTY	REC QTY	USE CDE
R12, R13, R25	Res, comp, 220Ω ±5%. ¼W	147959	01121	CB2215	3		
R14, R16, R19, R20	Res, comp, 47Ω ±10%, 1/8W	272211	01121	BB4701	4		
R15	Res, comp, 10Ω ±10%, 1/8W	321125	01121	BB1001	1		
R17, R18	Res, comp, 470Ω ±5%, ¼W	147983	01121	CB4715	2		
R24	Res, comp, 270Ω ±5%, ¼W	160804	01121	CB2715	1		
R26, R43, R44, R49	Res, comp, 12k ±5%, ¼W	159731	01121	CB1235	4		
R27	Res, met film, 40.2k ±1%, 1/8W	235333	91637	MFF1-840-22F	1		
R28	Res, met film, 20k ±1%, 1/8W	291872	91637	MFF1-82012F	1		
R29	Res, met film, 10k ±1%, 1/8W	168260	91637	MFF1-81012F	1		
R30, R31	Res, met film, 8.06k ±1%, 1/8W	294942	91637	MFF1-88061F	2		
R32, R37	Res, met film, 4.22k ±1%, 1/8W	168245	91637	MFF1-844221F	2		
R33	Res, var, cermet, 10k ±20%, ½W	226092	80294	3329H-1-103	1		
R34, R39	Res, met film, 24.9k ±1%, 1/8W	291369	91637	MFF1-82592F	2		
R35	Res, met film, 3.01k ±1%, 1/8W	312645	91637	MFF1-83-011F	1		
R36	Res, var, cermet, 2k ±10%, ½W	309666	11236	360T202A	1		
R40, R41	Res, met film, 2k ±1%, 1/8W	235226	91637	MFF1-82001F	2		
R45	Res, met film, 1k ±1%, 1/8W	168229	91637	MFF1-81001F	1		
R46	Res, met film 23.2k ±1%, 1/8W	291351	91637	MFF1-82322K	1		
R47	Res, comp, 15k ±5%, ¼W	148114	01121	CB1535	1		
U1,U2 U3	IC, Operational amplifier	271502	12040	LM301A	3		1
U4	IC, TTL, Hex inverter	292979	01295	3N7404N	1		1

10 MHz MAIN LOOP VCO PCB ASSEMBLY, A2A1

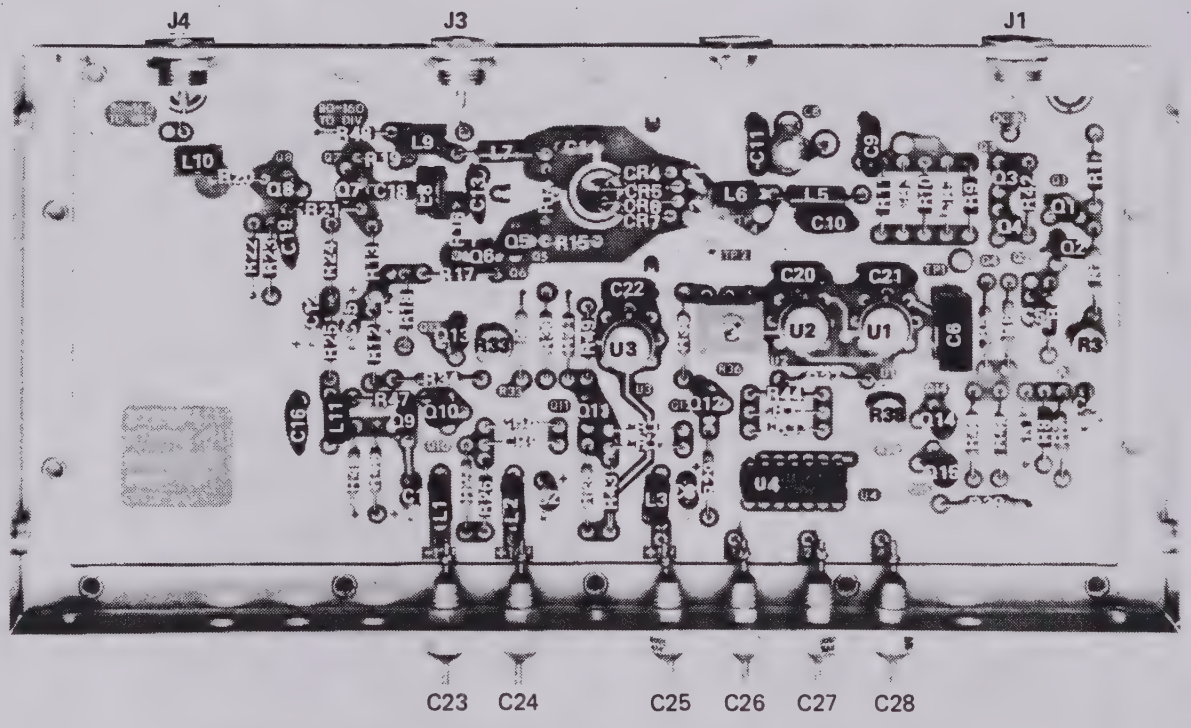

Figure 5-5. 10 MHz MAIN LOOP VCO PCB ASSEMBLY, A2A1

10 MHz MAIN LOOP PHASE DETECTOR MODULE ASSEMBLY, A3

REF DESIG OR ITEM NO.	DESCRIPTION	FLUKE STOCK NO.	MFG FED SPLY CDE	MFG PART NO. OR TYPE	TOT QTY	REC QTY	USE CDE
A3	**10 MHz MAIN LOOP PHASE DETECTOR MODULE ASSEMBLY** **Figure 5-6 6160A-4109**	323733	89536	323733	REF		
A3A1	10 MHz Main Loop Phase Detector PCB Assembly				1		
1	Module cover, inner	323204	89536	323204	2		
2	Module cover, outer	323212	89536	323212	1		
3	Screw, 4 - 40 x ¼, PNH - Phillips	129890	73734	19022	7		
4	Nameplate	329235	89536	329235	1		

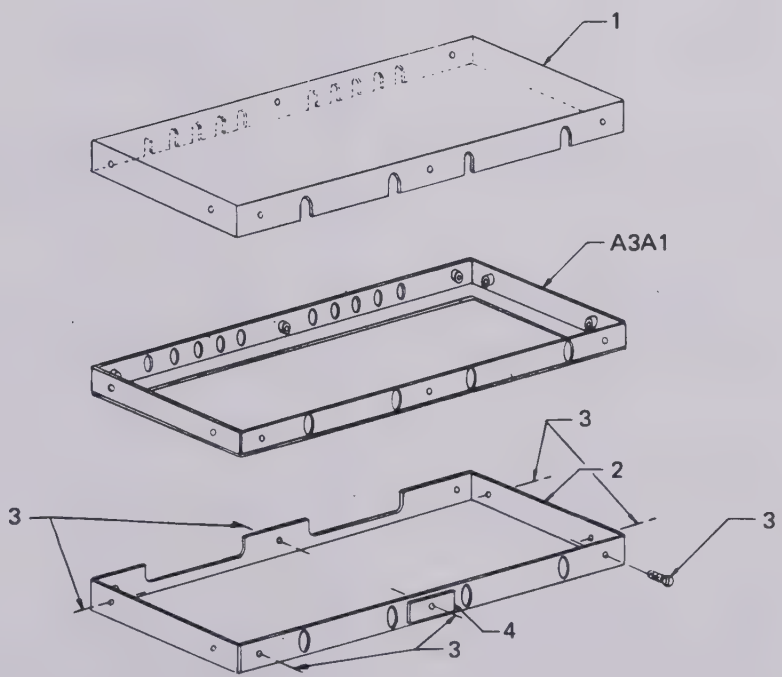

Figure 5-6. 10 MHz MAIN LOOP PHASE DETECTOR MODULE ASSEMBLY, A3

10 MHz MAIN LOOP PHASE DETECTOR PCB ASSEMBLY, A3A1

REF DESIG OR ITEM NO.	DESCRIPTION	FLUKE STOCK NO.	MFG FED SPLY CDE	MFG PART NO. OR TYPE	TOT QTY	REC QTY	USE CDE
A3A1	**10 MHz MAIN LOOP PHASE DETECTOR PCB ASSEMBLY** **Figure 5-7 6160A-4009**				REF		
C1,C2, C6 thru C12, C25, C26, C36 thru C39, C43	Cap, cer, 0.05 uf +80/-20%, 25V	148924	72982	5855-Y5U 5032	16		
C3, C4, C5, C28, C29, C41, C42	Cap, Ta, 2.2 uf ±20%, 20V	161927	56289	196D225X 0020	6		
C13, C15, C16, C32, C33, C35	Cap, cer, 0.005 uf ±20%, 50V	255471	32897	8121-050-651-005M	6		
C44 thru C47	Cap, feed-thru, 2500 pf, 500V	248286	04222	BSF1BB	4		
C14	Cap, cer, 7.5 pf ±0.25 pf, 500V	329961	04222	S1-1	1		
C17, C24, C31	Cap, mica, 220 pf ±5%, 500V	170423	53021	D15F221J	3		
C18, C20	Cap, mica, 82 pf ±5%, 500V	148502	53021	D15E820J	2		
C19	Cap, mica, 33 pf ±5%, 500V	160317	53021	D15E330J	1		
C21	Cap, mica, 330 pf ±5%, 500V	148445	53021	D15F331J	1		
C22	Cap, var, cer, 4.5 to 50 pf +70/-20%, 250V	321117	73899	DVJ 305A	1		
C23	Cap, mica, 39 pf ±5%, 500V	148544	53021	D15E390J	1		

10 MHz MAIN LOOP PHASE DETECTOR PCB ASSEMBLY, A3A1

REF DESIG OR ITEM NO.	DESCRIPTION	FLUKE STOCK NO.	MFG FED SPLY CDE	MFG PART NO. OR TYPE	TOT QTY	REC QTY	USE CDE
C27, C40	Cap, cer, 0.0012 uf ±10%, 500V	106732	71590	CF-122	2		
C30	Cap, mica, 18 pf ±5%, 500V	266585	53021	D15C180J	1		
C34	Cap, var, 1 to 10 pf ±20%, 250V	229930	73899	VAM010W	1		
CR1, CR6, CR7, CR13, CR14, CR20	Diode, hot carrier	313247	28480	5082-2811	6	2	
CR2 thru CR5, CR9 thru CR12	Diode, hot carrier	329623	28480	2833	8	2	
CR8, CR15 thru CR19, CR21	Diode, silicon, 150 mA	203323	03508	1N4148	7	2	
J1 thru J4	Conn, male, coaxial	207639	13511	27 - 875	4		
L1 thru L6, L10 thru L15	Bead, 6 turn	320911	89536	320911	12		
L7	Inductor, 0.15 uh ±10%, 2600 mA	256297	24759	MR-0.15	1		
L8,L9	Inductor, 3.9 uh ±10%, 815 mA	328054	24759	MR-3.9	2		
Q1 thru Q4, Q17,Q18	Xstr, Si, PNP	226290	04713	MPS3640	6	2	

10 MHz MAIN LOOP PHASE DETECTOR PCB ASSEMBLY, A3A1

REF DESIG OR ITEM NO.	DESCRIPTION	FLUKE STOCK NO.	MFG FED SPLY CDE	MFG PART NO. OR TYPE	TOT QTY	REC QTY	USE CDE
Q5, Q6, Q15, Q16	Xstr, Si, NPN	248351	04713	MPS918	4	1	
Q7	Xstr, Si, PNP	195974	04713	2N3906	1	1	
Q8,Q9	Xstr, Si, NPN	168716	07263	S19234	2	1	
Q10, Q11, Q14	Xstr, Si, NPN	218396	04713	2N3904	3	1	
Q12, Q13	Xstr, Si, PNP	225599	07263	S22650	2	1	
Q19	Xstr, J-FET, N-Channel	261578	89144	U2366E	1	1	
R1	Res, comp, 390Ω ±5%, ¼W	147975	01121	CB3915	1		
R2,R3 R9, R55	Res, comp, 120Ω ±5%, ¼W	170712	01121	CB1215	4		
R4, R5, R15	Res, comp, 3.3k ±5%, ¼W	148056	01121	CB3325	3		
R6, R7, R17, R34, R44, R45	Res, comp, 220Ω ±5%, ¼W	147959	01121	CB2215	6		
R8, R11, R35, R41	Res, comp 82Ω ±5%, ¼W	149484	01121	CB 8205	4		
R10, R39, R40, R53	Res, comp, 47Ω ±5%, ¼W	147892	01121	CB4705	4		
R12, R14, R37, R42, R47, R51	Res, comp, 1k ±5%, ¼W	148023	01121	CB1025	6		
R13, R54	Res, comp, 470Ω ±5%, ¼W	147983	01121	CB4715	2		

10 MHz MAIN LOOP PHASE DETECTOR PCB ASSEMBLY, A3A1

REF DESIG OR ITEM NO.	DESCRIPTION	FLUKE STOCK NO.	MFG FED SPLY CDE	MFG PART NO. OR TYPE	TOT QTY	REC QTY	USE CDE
R16	Res, comp, 15k ±5%, ¼W	148114	01121	CB1535	1		
R18, R22	Res, comp, 2.2k ±5%, ¼W	148049	01121	CB2225	2		
R19, R20, R36	Res, comp, 12k ±5%, ¼W	159731	01121	CB1235	3		
R21	Res, comp, 1.8k ±5%, ¼W	175042	01121	CB1825	1		
R23, R32	Res, comp, 6.8k ±5%, ¼W	148098	01121	CB6825	2		
R24	Res, comp, 330k ±5%, ¼W	192948	01121	CB3315	1		
R25, R30, R49	Res, comp, 8.2k ±5%, ¼W	160796	01121	CB8225	3		
R26, R33	Res, comp, 4.7k ±5%, ¼W	148072	01121	CB4725	2		
R27, R31	Res, met flm, 118k ±1%, 1/8W	291310	91637	MFF1-81183F	2		
R28	Res, met flm, 267k ±1%, 1/8W	289090	91637	MFF1-82673F	1		
R29	Res, var, cermet, 20k ±10%, ½W	291609	71450	360S-203A	1		
R38	Res, comp, 3.9k ±5%, ¼W	148064	01121	CB3925	1		
R43	Res, comp, 56Ω ±5%, ¼W	147900	01121	CB5605	1		
R46	Res, comp, 18k ±5%, ¼W	148122	01121	CB1835	1		
R48, R56	Res, comp, 120k ±5%, ¼W	193458	01121	CB1245	2		
R50	Res, comp, 160Ω ±5%, ¼W	261859	01121	CB1615	1		
R52	Res, comp, 68k ±5%, ¼W	148171	01121	CB6835	1		
T1 thru T5	Transformer, 8 turn	321067	89536	321067	5		
U1	Mixer, double balanced	320887	27956	M6K	1		
U2	IC, operational amplifier	329912	27014	LM318H	1	1	
U3, U4, U5	IC, operational amplifier	271502	12040	LM301A	3	1	

10 MHz MAIN LOOP PHASE DETECTOR PCB ASSEMBLY, A3A1

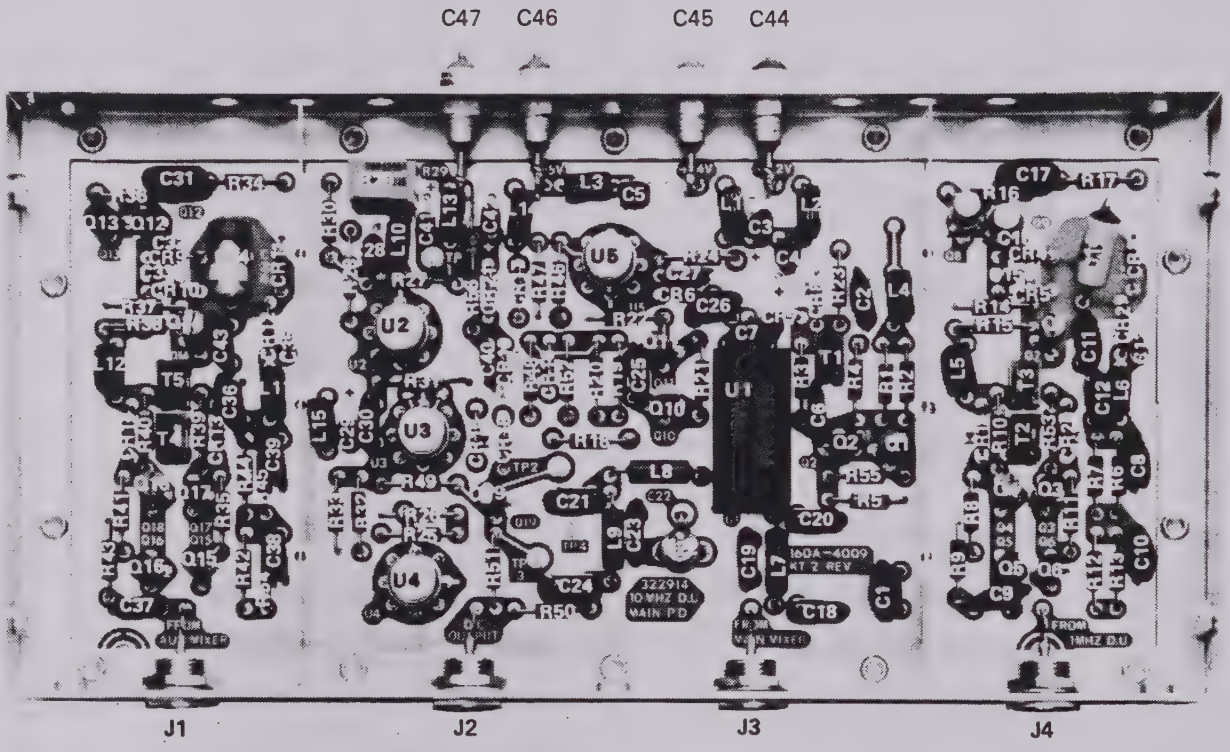

Figure 5-7. 10 MHz MAIN LOOP PHASE DETECTOR PCB ASSEMBLY, A3A1

10 MHz I. F. MIXER MODULE ASSEMBLY, A4

REF DESIG OR ITEM NO.	DESCRIPTION	FLUKE STOCK NO.	MFG FED SPLY CDE	MFG PART NO. OR TYPE	TOT QTY	REC QTY	USE CDE
A4	**10 MHz I. F. MIXER MODULE ASSEMBLY** **Figure 5-8 6160A-4108**	323725	89536	323725	REF		
A4A1	10 MHz I. F. Mixer PCB Assembly				1		
1	Module cover, inner	323204	89536	323204	1		
2	Module cover, outer	323212	89536	323212	1		
3	Screw, 4 - 40 x ¼ PNH - Phillips	129890	73734	19022	7		
4	Nameplate	329227	89536	329227	1		

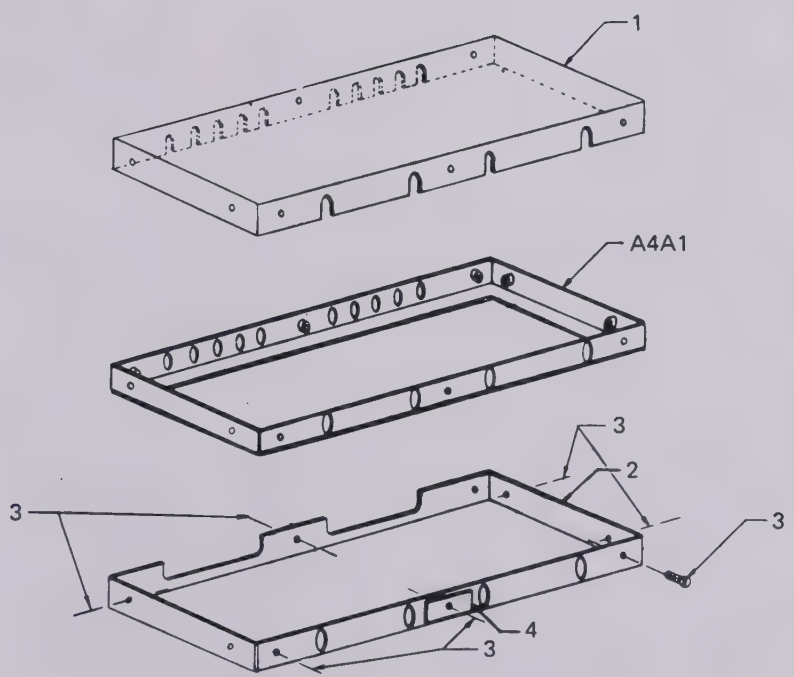

Figure 5-8. 10 MHz I.F. MIXER MODULE ASSEMBLY, A4

10 MHz IF MIXER PCB ASSEMBLY, A4A1

REF DESIG OR ITEM NO.	DESCRIPTION	FLUKE STOCK NO.	MFG FED SPLY CDE	MFG PART NO. OR TYPE	TOT QTY	REC QTY	USE CDE
A4A1	10 MHz I.F. MIXER PCB ASSEMBLY Figure 5-9 6160A-4008				REF		
C1, C11, C34, C36, C39, C41, C43	Cap, cer, 0.05 uf +80/-20%, 25V	148924	72982	5855-Y5U-5032	7		
C2, C12, C23, C24, C25, C29, C33	Cap, Ta, 2.2 uf ±20%, 20V	161927	56289	196D225X0020	7		
C3	Cap, cer, 0.005 uf ±20%, 50V	225471	32897	8121-050-651-005M	1		
C4,C5 C13, C14, C15, C30, C31, C32, C35, C37, C40, C42	Cap, cer, 0.0012 uf ±10%, 500V	106732	71590	CF-122	12		
C6,C38	Cap, mica, 22 pf ±5%, 500V	148551	53021	D15220J	2		
C7	Cap, mica, 5.6 pf ±5%, 500V	329631	53021	D15C5-6J	1		
C8, C26	Cap, mica, 27 pf ±5%, 500V	177998	53021	D15E270J	2		
C9,C16	Cap, mica, 18 pf ±5%, 500V	266585	53021	D15C180J	2		
C10	Cap, mica, 15 pf ±5%, 500V	148569	53021	D15C150J	1		
C17	Cap, mica, 12 pf ±5%, 500V	175224	53021	D15E120J	1		
C18	Cap, mica, 100 pf ±5%, 500V	148494	53021	D15F101J	1		
C19	Cap, mica, 7.7 pf ±5%, 500V	329649	53021	D15C7-7J	1		

10 MHz IF MIXER PCB ASSEMBLY, A4A1

REF DESIG OR ITEM NO.	DESCRIPTION	FLUKE STOCK NO.	MFG FED SPLY CDE	MFG PART NO. OR TYPE	TOT QTY	REC QTY	USE CDE
C20	Cap, mica, 150 pf ±5%, 500V	148478	53021	D15F151J	1		
C21	Cap, mica, 33 pf, ±5%, 500V	160317	53021	D15E330J	1		
C27	Cap, mica, 130 pf ±5%, 500V	266205	53021	D15F131J	1		
C28	Cap, mica 91 pf ±5%, 500V	277228	53021	D15E910J	1		
C44 thru C46	Cap, feed-thru, 2500 pf, 500V	248286	04222	BSF-1BB	3		
CR1,CR2	Diode, hot carrier	313247	28480	5083-2811	2	1	
CR3	Diode, silicon, 150 mA	203323	03508	1N4148	1	1	
J1 thru J4	Connector, male, coaxial	207639	13511	27-875	4		
L1	Coil, 3-1/2, turn	332783	89536	332783	1		
L2	Coil, 1-1/2 turn	332775	89536	332775	1		
L3, L4, L10 thru L13, L17, L18, L19	Bead, 6 turn	320911	89536	320911	9		
L5,L9	Coil, 8 turn	332809	89536	332809	2		
L6	Coil, 1 turn	332767	89536	332767	1		
L7	Coil, 10 turn	332817	89536	332817	1		
L8	Coil, 5 turn	332791	89536	332791	1		
L14	Inductor, 0.47 uh ±5%	329664	89536	329664	1		
L15, L16	Inductor, 0.39 uh	329656	89536	329656	2		
Q1, Q2, Q3	Xstr, Si, NPN	260638	25403	A485	3	1	

10 MHz IF MIXER PCB ASSEMBLY, A4A1

REF DESIG OR ITEM NO.	DESCRIPTION	FLUKE STOCK NO.	MFG FED SPLY CDE	MFG PART NO. OR TYPE	TOT QTY	REC QTY	USE CDE
Q4	Xstr, Si, NPN	248351	04713	MPS918	1	1	
Q5,Q7, Q10	Xstr, Si, NPN	226290	04713	MPS3640	3	1	
Q6	Xstr, FET, N-Channel	288324	15818	U1994E	1	1	
Q8, Q9	Xstr, Si, NPN	195974	04713	2N 3906	2	1	
R1	Res, comp, 150Ω ±5%, ¼W	147934	01121	CB1515	1		
R2, R3	Res, comp, 430Ω ±5%, ¼W	203869	01121	CB4315	2		
R4, R22, R40 R41	Res, comp, 100Ω ±5%, ¼W	147926	01121	CB1015	4		
R5, R6	Res, comp, 47Ω ±10%, 1/8W	272211	01121	BB4701	2		
R7	Res, comp, 68Ω ±5%, ¼W	147918	01121	CB6805	1		
R8	Res, comp, 470Ω ±5%, ¼W	147983	01121	CB4715	1		
R9	Res, comp, 560Ω ±5%, ¼W	147991	01121	CB5615	1		
R10	Res, comp, 270Ω ±5%, ¼W	160804	01121	CB2715	1		
R11	Res, comp 130Ω ±5%, ¼W	325704	01121	CB1315	1		
R12	Res, comp, 75Ω ±5% ¼W	246736	01121	CB7505	1		
R13	Res, comp, 100Ω ±10%, 1/8W	261826	01121	BB1011	1		
R14, R16	Res, comp, 240Ω ±5%, ¼W	221895	01121	CB2415	2		
R15	Res, comp, 43Ω ±5%, ¼W	177162	01121	CB4305	1		
R17, R25	Res, comp 82Ω ±5%, ¼W	149484	01121	CB8205	2		
R18, R37, R38	Res, comp, 2k ±5%, ¼W	202879	01121	CB2025	3		
R19, R24	Res, comp, 39Ω ±5%, ¼W	193391	01121	CB3905	2		
R20	Res, comp, 22k ±5%, ¼W	148130	01121	CB2235	1		
R21, R39	Res, comp, 220Ω ±5%, ¼W	147959	01121	CB2215	2		
R23, R27	Res, comp, 510Ω ±5%, ¼W	218032	01121	CB5115	2		

10 MHz IF MIXER PCB ASSEMBLY, A4A1

REF DESIG OR ITEM NO.	DESCRIPTION	FLUKE STOCK NO.	MFG FED SPLY CDE	MFG PART NO. OR TYPE	TOT QTY	REC QTY	USE CDE
R26, R42	Res, comp, 390Ω ±5%, ¼W	147975	01121	CB3915	2		
R28	Res, comp, 1.2k ±5%, ¼W	190371	01121	CB1225	1		
R29	Res, comp, 6.8k ±5%, ¼W	148098	01121	CB6825	1		
R30	Res, comp, 47k ±5%, ¼W	148163	01121	CB4735	1		
R31, R32	Res, comp, 750Ω ±5%, ¼W	218024	01121	CB7515	2		
R33, R34	Res, comp, 12k ±5%, ¼W	159731	01121	CB1235	2		
R35	Res, var, cermet, 1k ±20%, ¼W	193060	80294	3329H-1-102	1		
R36	Res, comp, 910Ω ±5%, ¼W	203851	01121	CB9115	1		
R43	Res, comp, 330Ω ±5%, ¼W	147967	01121	CB3315	1		
T1,T2	Transformer	320903	89536	320903	2		
T3, T4	Transformer, 8 turn	321067	89536	321067	2		
U1	Mixer, double balance	248260	27956	M6F	1	1	

10 MHz IF MIXER PCB ASSEMBLY, A4A1

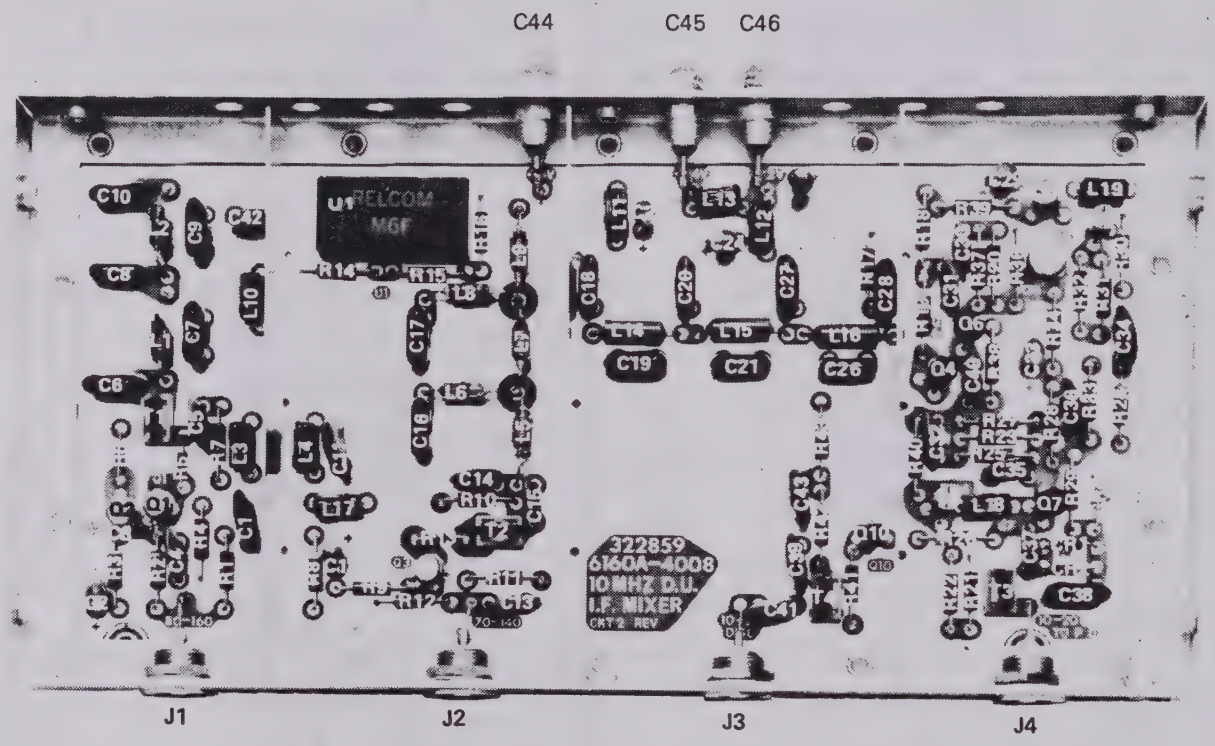

Figure 5-9. 10 MHz IF MIXER PCB ASSEMBLY, A4A1

10 MHz STEP LOOP VCO MODULE ASSEMBLY, A5

REF DESIG OR ITEM NO.	DESCRIPTION	FLUKE STOCK NO.	MFG FED SPLY CDE	MFG PART NO. OR TYPE	TOT QTY	REC QTY	USE CDE
A5	**10 MHz STEP LOOP VCO MODULE ASSEMBLY** **Figure 5-10 6160A-4107-1**	341545	89536	341545	REF		
A5A1	10 MHz Step Loop VCO PCB Assembly				1		
1	Module cover - inner	323204	89536	323204	1		
2	Module cover - outer	323212	89536	323212	1		
3	Screw, PNH - Phillips 4 - 40 X ¼	129890	73734	19022	7		
4	Nameplate	329219	89536	329219	1		

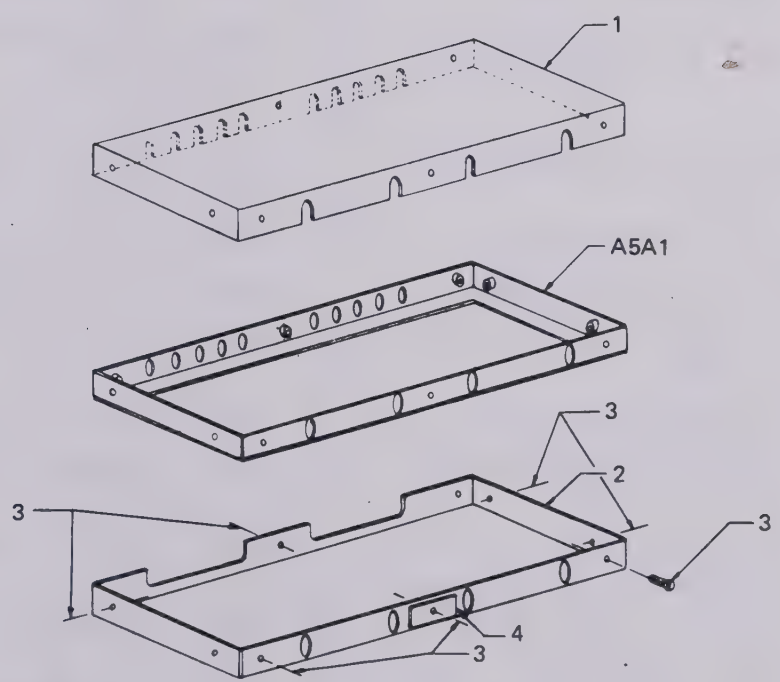

Figure 5-10. 10 MHz STEP LOOP VCO MODULE ASSEMBLY, A5

10 MHz STEP LOOP VCO PCB ASSEMBLY, A5A1

REF DESIG OR ITEM NO.	DESCRIPTION	FLUKE STOCK NO.	MFG FED SPLY CDE	MFG PART NO. OR TYPE	TOT QTY	REC QTY	USE CDE
A5A1	**10 MHz STEP LOOP VCO PCB ASSEMBLY** **Figure 5-11 6160A-4007**				REF		
C1	Cap, mica, 24.5 pf ±2%, 500V	335620	53021	D15C24.5G	1		
C2	Cap, mica, 15 pf ±2%, 500V	335612	53021	D15C150G	1		
C3	Cap, mica, 10 pf ±2%, 500V	335638	53021	D15C100G	1		
C4	Cap, mica, 13.5 pf ±2%, 500V	335646	53021	D15C13.5G	1		
C5 thru C9, C11, C14, C17, C26	Cap, Ta, 2.2 uf ±20%, 20V	161927	56289	196D225X0020	9		
C10, C13, C15	Cap, cer, 0.05 uf +80/-20%, 25V	148924	72982	5855-Y5U-5032	3		
C12, C16	Cap, cer, 0.0012 uf ±10%, 500V	106732	71590	CF-122	2		
C18, C22, C23	Cap, mica, 33 pf ±5%. 500V	160317	53021	D15E330J	3		
C19	Cap, mica, 430 pf ±5%, 500V	177980	53021	D15F431J	1		
C20	Cap, mica, 39 pf ±5%, 500V	148544	53021	D15E390J	1		
C21	Cap, var, cer, 4.5 to 50 pf +70/-20%, 250V	321117	73899	DVJ305A	1		
C24	Cap, mica, 330 pf ±5%, 500V	148445	53021	D15F331J	1		
C25	Cap, plstc, 0.033 uf ±10%, 50V	271841	06001	75F1R5A334	1		
C27 thru C32	Cap, feed-thru, 2500 pf, 500V	248286	04222	BSF-1BB	6		
CR1, CR4	Diode, hot carrier, 1.0 pf, 32V	333906	28480	5082-2835	2	1	
CR2, CR3	Diode, pin, switching	334227	04713	MPN 3402	2	1	
CR5 thru CR8	Diode, tuning, hyper-abrupt	320200	KEV Elec-tronics	TYPE-KV2001	4	1	

10 MHz STEP LOOP VCO PCB ASSEMBLY, A5A1

REF DESIG OR ITEM NO.	DESCRIPTION	FLUKE STOCK NO.	MFG FED SPLY CDE	MFG PART NO. OR TYPE	TOT QTY	REC QTY	USE CDE
CR9 thru CR19	Diode, silicon, 150 mA	203323	03408	1N4148	11	1	
J1 thru J4	Connector, male, coaxial	207639	13511	27-875	4		
L1	Coil, 1 turn	332767	89536	332767	1		
L2	Coil, 5 turn	332791	89536	332791	1		
L3	Coil, 10 turn	332817	89536	332817	1		
L4, L5	Coil, 8 turn	332809	89536	332809	2		
L6 thru L11	Bead, 6 turn	320911	89536	320911	6		
L14	Bead, 1 turn	219535	02114	56-060-85-3B	1		
L15	Inductor, 3.9 uh	328054	24759	MR-3.9	1		
L16	Inductor, 1 uh	320952	24759	MR-1.0	1		
Q1, Q16, Q18	Xstr, Si, NPN	218396	03713	2N 3904	3	1	
Q2, Q17, Q19, Q20, Q24	Xstr, Si, PNP	195974	04713	2N 3906	5	1	
Q3 thru Q10, Q15	Xstr, Si, NPN	242065	04713	2N 5089	9	2	
Q11 thru Q14	Xstr, Si, NPN	248351	04713	MPS 918	4	1	
Q21, Q23	Xstr, Si, PNP, dual	242016	11726	QD401-78E	2	1	
Q22	Xstr, Si, NPN, dual	295717	11726	QD101-78E	1	1	

10 MHz STEP LOOP VCO PCB ASSEMBLY, A5A1

REF DESIG OR ITEM NO.	DESCRIPTION	FLUKE STOCK NO.	MFG FED SPLY CDE	MFG PART NO. OR TYPE	TOT QTY	REC QTY	USE CDE
R1, R4, R5	Res, comp, 4.7k ±5%, ¼W	148072	01121	CB 4725	3		
R2, R3	Res, comp, 390Ω ±5%, ¼W	147975	01121	CB 3915	2		
R6, R43	Res, comp, 12k ±5%, ¼W	159731	01121	CB1235	2		
R7	Res, comp, 10k ±5%, ¼W	148106	01121	CB 1035	1		
R8	Res, met flm, 28.7k ±1%, 1/8W	235176	91637	MFF1-82872F	1		
R9	Res, met flm, 15.8k ±1%, 1/8W	335398	91637	MFF1-81582F	1		
R10	Res, met flm, 16.5k ±1%, 1/8W	335380	91637	MFF1-81652F	1		
R11	Res, met flm, 17.4k ±1%, 1/8W	335372	91637	MFF1-81742F	1		
R12	Res, met flm, 22.1k ±1%, 1/8W	335364	91637	MFF1-82212F	1		
R13	Res, met flm, 28.7k ±1%, 1/8W	335315	91637	MFF1-82872F	1		
R14	Res, met flm, 38.3k ±1%, 1/8W	235323	91637	MFF1-83832F	1		
R15	Res, met flm, 71.5k ±1%, 1/8W	291435	91637	MFF1-87152F	1		
R16, R35, R40, R41, R46	Res, comp, 2.2k ±5%, ¼W	148049	91637	CB 2225	5		
R17	Res, comp, 2.7k ±5%, ¼W	170720	01121	CB 2725	1		
R18, R19, R24, R25	Res, comp, 47Ω ±10%, 1/8W	272211	01121	BB 4701	4		
R20, R56, R57	Res, comp, 100 Ω ±5%, ¼W	147926	01121	CB1015	3		
R21	Res, comp, 270Ω ±5%, ¼W	160804	01121	CB2715	1		
R22, R26, R27	Res, comp, 220Ω ±5%, ¼W	147959	01121	CB 2015	3		
R23	Res, comp, 68Ω ±5%, ¼W	147918	01121	CB6805	1		
R28, R29	Res, comp, 470Ω ±5%, ¼W	147983	01121	CB 4715	2		

10 MHz STEP LOOP VCO PCB ASSEMBLY, A5A1

REF DESIG OR ITEM NO.	DESCRIPTION	FLUKE STOCK NO.	MFG FED SPLY CDE	MFG PART NO. OR TYPE	TOT QTY	REC QTY	USE CDE
R30	Res, comp, 10Ω ±10%, 1/8 W	321125	01121	BB1001	1		
R31	Res, met flm. 9.09k ±1%, 1/8W	335406	91637	MFF1-89091F	1		
R32	Res, met flm, 115k ±1%, 1/8W	335356	91637	MFF1-81153F	1		
R33	Res, met flm, 12.7k ±1%, 1/8W	335349	91637	MFF1-81272F	1		
R34	Res, met flm, 13.3k ±1%, 1/8W	296566	91637	MFF1-81332F	1		
R36	Res, met flm, 1.07k ±1%, 1/8W	335448	91637	MFF1-81071F	1		
R37	Res, met flm, 11.3k ±1%, 1/8W	335414	91637	MFF1-81132F	1		
R38	Res, met flm, 1.54k ±1%, 1/8W	335331	91637	MFF1-81541F	1		
R39, R45	Res, comp, 15k ±5%, ¼W	148114	01121	CB1525	1		
R42	Res, var, cermet, 500Ω ±20%, ½W	226068	80294	3329H-1-501	1		
R44	Res, comp, 6.8k ±5%, ¼W	148098	01121	CB6825	1		
R47, R48	Res, met flm, 2k ±1%, 1/8W	335422	91637	MFF1-82001F	2		
R49	Res, met flm, 26.1k ±1%, 1/8W	335430	91637	MFF1082612F	1		
R50	Res, met flm, 11.3k ±1%, 1/8W	293639	91637	MFF1-81132F	1		
R51, R52	Res, met flm, 1.21k ±1%, 1/8W	229146	91637	MFF1-81211F	2		
R53	Res, met flm, 34.8k ±1%, 1/8W	261487	91637	MFF1-83482F	1		
R54	Res, met flm, 121k ±1%, 1/8W	229369	91637	MFF1-81213F	1		
R55	Res, met flm. 22.1k ±1%, 1/8W	235234	91637	MFF1-82212F	1		
R58	Res, comp, 15Ω ±10%, 1/8W	261800	01121	BB 1501	1		
R59	Res, met flm, 16.2k ±1%, 1/8W	226233	91637	MFF1-81622F	1		
R60	Res, var, cermet, 2k ±20%, ½W	226076	19701	ET50W202	1		
R70	Res, var, cermet, 1k ±20%, ¼W	193060	80294	3329H - 1-102	1		
R80	Res, var, cermet, 50k ±10%, ½W	335778	71450	360T-502A	1		
R90	Res, var, cermet, 20k ±10%, 1/8W	335760	71450	360T-202A	1		
R100, R110, R120	Res, var, cermet, 10k ±10%, ½W	309674	71450	360T -102A	3		

10 MHz STEP LOOP VCO PCB ASSEMBLY, A5A1

REF DESIG OR ITEM NO.	DESCRIPTION	FLUKE STOCK NO.	MFG FED SPLY CDE	MFG PART NO. OR TYPE	TOT QTY	REC QTY	USE CDE
R130, R140	Res, var, cermet, 5k ±10%, ½W	327569	71450	360T-502A	2		
T1, T2, T3	Transformer	320903	89536	320903	3		
U1, U3	IC, Operational amplifier	271502	12040	LM301A	1	1	
U2	IC, Operational amplifier	340067	07263	U5B7101392	1	1	
U4	IC, TTL, BCD to decimal decoders	293142	01295	SN7442N	1	1	

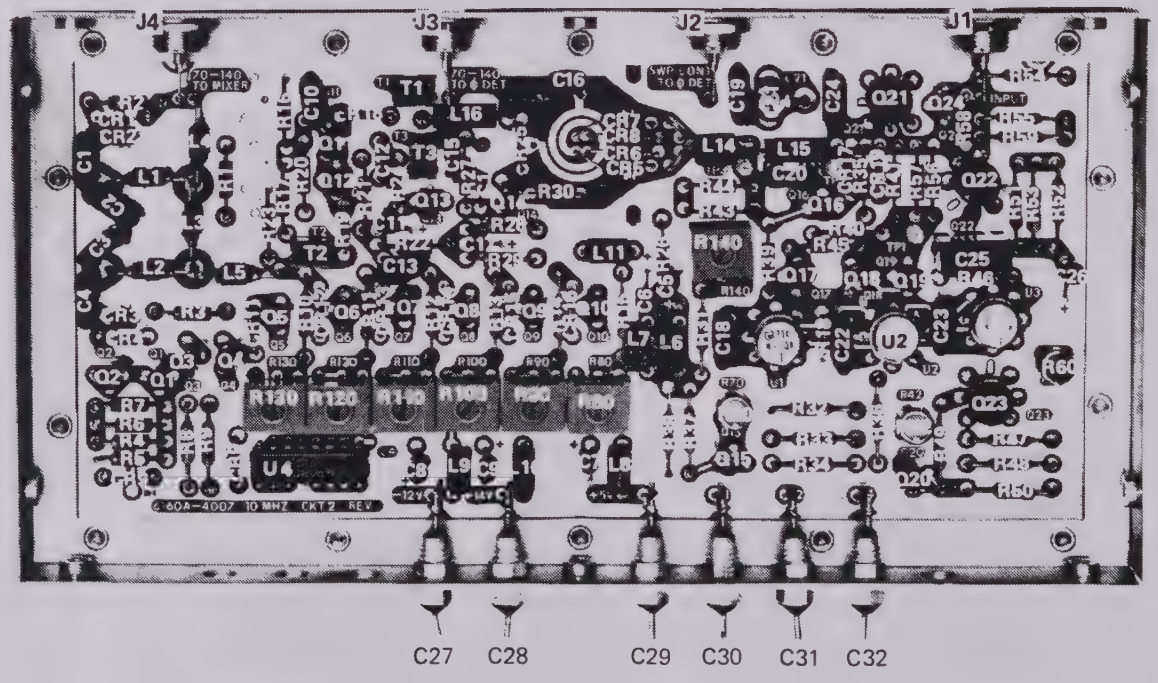

Figure 5-11. 10 MHz STEP LOOP VCO PCB ASSEMBLY, A5A1

10 MHz STEP LOOP PHASE DETECTOR MODULE ASSEMBLY, A6

REF DESIG OR ITEM NO.	DESCRIPTION	FLUKE STOCK NO.	MFG FED SPLY CDE	MFG PART NO. OR TYPE	TOT QTY	REC QTY	USE CDE
A6	**10 MHz STEP LOOP PHASE DETECTOR MODULE ASSEMBLY** **Figure 5-12 6160A-4106-1**	341537	89536	341537	REF		
A6A1	10 MHz Step Loop Phase Detector PCB Assembly 6160A-4006				1		
1	Module cover - inner	323204	89536	323204	1		
2	Module cover - outer	323212	89536	323212	1		
3	Screw, PNH - Phillips. 4-40 X ¼	129890	73734	19022	7		
4	Nameplate	329201	89536	329201	1		

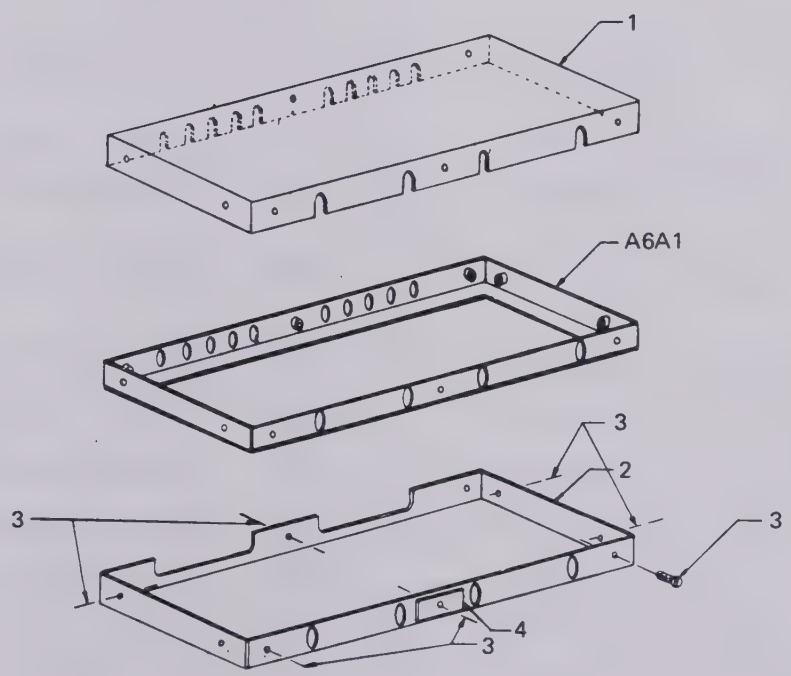

Figure 5-12. 10 MHz STEP LOOP PHASE DETECTOR MODULE ASSEMBLY, A6

10 MHz STEP LOOP PHASE DETECTOR PCB ASSEMBLY, A6A1

REF DESIG OR ITEM NO.	DESCRIPTION	FLUKE STOCK NO.	MFG FED SPLY CDE	MFG PART NO. OR TYPE	TOT QTY	REC QTY	USE CDE
A6A1	10 MHZ STEP LOOP PHASE DETECTOR PCB ASSEMBLY Figure 5-13 6160A-4006				REF		
C1,C5, C6, C18, C19, C24, C26, C27, C28	Cap, cer, 0.05 uf +80/-20%, 25V	148924	72984	5855-YSU-5032	9		
C2, C23, C40, C41, C42	Cap, Ta, 2.2 uf ±20%, 20V	161927	56289	196D225X0020	5		
C3, C12, C29, C35	Cap, cer, 0.0012 uf ±10%, 500V	106732	71590	CF-122	4		
C4	Cap, cer, 0.005 uf ±20%, 500V	255471	32897	8121-050-651-005M	1		
C7	Cap, mica, 22 pf ±5%, 500V	148551	53021	D15E220J	1		
C8	Cap, mica, 56 pf ±5%, 500V	329631	53021	D15C560F	1		
C9, C31, C34	Cap, mica, 27 pf ±5%, 500V	177998	53021	D15E270J	3		
C10	Cap, mica, 18 pf ±5%, 500V	266585	53021	D15C180J	1		
C11, C22	Cap, mica, 15 pf ±5%, 500V	148569	53021	D15C150J	2		
C13	Cap, var, cer, 4.5 to 50 pf+70/-20%,250V	321117	73899	DVJ 305A	1		
C14	Cap, mica, 39 pf ±5%, 500V	148544	53021	D15E 390J	1		
C15	Cap, mica, 330 pf ±5%, 500V	148445	53021	D15F 331J	1		
C16	Cap, mica, 220 pf ±5%, 500V	170423	53021	D15F 221J	1		
C17	Cap, cer, 0.01 uf +80/-20%, 25/50V	335786	32897	5835-000-Y5U - 1032	1		
C20, C21, C25	Cap, mica, 430 pf ±5%, 500V	177980	53021	D15F 431J	3		

10 MHz STEP LOOP PHASE DETECTOR PCB ASSEMBLY, A6A1

REF DESIG OR ITEM NO.	DESCRIPTION	FLUKE STOCK NO.	MFG FED SPLY CDE	MFG PART NO. OR TYPE	TOT QTY	REC QTY	USE CDE
C30	Cap, mica, 2 pf ±0.05 pf	175208	53021	D15C020D	1		
C32	Cap, Ta, 10 uf ±20%, 10V	176214	56289	196D106X001	1		
C33	Cap, mica, 51 pf ±2%, 500V	335810	53021	D15E510G	1		
C36	Cap, mica, 15 pf ±2%, 500V	335612	53021	D15C150G	1		
C37	Cap, mica, 24.5 pf ±2%, 500V	335620	53021	D15C24.5G	1		
C38	Cap, mica, 10 pf ±2%, 500V	335638	53021	D15C100G	1		
C39	Cap, mica, 13.5 pf ±2%, 500V	335646	53021	D15C13.5G	1		
C41 thru C45	Cap, feed-thru, 2500 pf, 500V	248286	04222	BSF-1BB	4		
CR1, CR9, CR10, CR12 thru CR17, CR19, CR20	Diode, silicon, 150 mA	203323	03508	1N4148	11	1	
CR2, CR3	Diode, hot carrier, 1.2 pf, 0.41V	313247	28480	5082-2811	2	1	
CR4, CR6, CR18	Diode, hot carrier, 1.0 pf, .32V	333906	28480	5082-2835	3	1	
CR5, CR7, CR8	Diode, pin, silicon, switching	334227	04713	MPN3402	3	1	
CR11	Diode, step recovery	335588	28480	5082-0180	1	1	
J1 thru J4	Connector, male, coaxial	207639	13511	27-875	4		
L1	Coil, assy, VHF, 1 turn	332767	89536	332767	1		
L2	Coil, assy, VHF, 5 turn	332791	89536	332791	1		
L3, L4 L5, L13, L14, L15, L17, L18, L19	Inductor, 6 turn beads	320911	89536	320911	9		

10 MHz STEP LOOP PHASE DETECTOR PCB ASSEMBLY, A6A1

REF DESIG OR ITEM NO.	DESCRIPTION	FLUKE STOCK NO.	MFG FED SPLY CDE	MFG PART NO. OR TYPE	TOT QTY	REC QTY	USE CDE
L6	Coil, assy, VHF, .3 1/2 turn	332783	89536	332783	1		
L7	Coil, assy, VHF, 1 1/2 turn	332775	89536	332775	1		
L8, L10, L20	Coil, assy, VHF, 8 turn	332809	89536	332809	3		
L9, L11	Coil, assy, VHF, 10 turn	332817	89536	332817	2		
L12, L21	Inductor, 3.9 uh ±10%, 815 mA	328054	24759	MR-3.9	2		
L16	Inductor, 0.27 uh ±10%, 1625 mA	313031	24759	MR-0.27	1		
L22	Inductor, 0.47 uh ±10%, 1060 mA	320929	24759	MR-0.47	1		
Q1, Q2	Xstr, Si, NPN	260638	25403	A485	2	1	
Q3, Q6, Q7, Q15, Q16	Xstr, Si, NPN	195974	04713	2N 3906	5	1	
Q4, Q8, Q9, Q12, Q13, Q14	Xstr, Si, NPN	218396	04713	2N3904	6	2	
Q5	Xstr, Si, NPN	242065	04713	2N5089	1	1	
Q10, Q11	Xstr, Si, NPN	179374	07269	2N2218	2	1	
R1	Res, comp, 150Ω ±5%, ¼W	147934	01121	CB1515	1		
R2,R3	Res, comp, 430Ω ±5%, ¼W	203869	01121	CB4315	2		
R4, R35	Res, comp, 100Ω ±5%, ¼W	147926	01121	CB1015	2		
R5,R7, R32, R33	Res, comp, 47Ω ±10%, 1/8W	272211	01121	BB4701	4		
R6	Res, comp, 68Ω ±5%, ¼W	147918	01121	CB6805	1		

10 MHz STEP LOOP PHASE DETECTOR PCB ASSEMBLY, A6A1

REF DESIG OR ITEM NO.	DESCRIPTION	FLUKE STOCK NO.	MFG FED SPLY CDE	MFG PART NO. OR TYPE	TOT QTY	REC QTY	USE CDE
R6	Res, comp, 68Ω ±5%, ¼W	147918	01121	CB6805	1		
R8, R13, R56	Res, comp, 1k ±5%, ¼W	148023	01121	CB1025	3		
R9, R14, R18, R42, R52	Res, comp, 6.8k ±5%. ¼W	148098	01121	CB6825	5		
R10, R12	Res, comp, 220Ω ±5%, ¼W	147959	01121	CB2215	2		
R11	Res, comp, 1.8k ±5%, ¼W	175042	01121	CB1825	1		
R15	Res, comp, 5.6k ±5%, ¼W	148080	01121	CB5625	1		
R16, R24, R57	Res, comp, 3.3k ±5%, ¼W	148056	01121	CB3325	3		
R17	Res, comp, 15k ±5%, ¼W	234682	01121	CB1535	1		
R19	Res, comp, 56k ±5%, ¼W	170738	01121	CB5635	1		
R20	Res, met flm, 37.4k ±1%, 1/8W	226241	91637	MFF1-83742F	1		
R21	Res, met flm, 10k ±1%, 1/8W	168260	91637	MFF1-81002F	1		
R22	Res, met flm, 40.2k ±1%, 1/8W	235333	91637	MFF1-84022F	1		
R23	Res, met flm, 97.6k ±1%, 1/8W	241380	91637	MFF1-89762F	1		
R25, R26	Res, comp, 1.5k ±5%, ¼W	148031	01121	CB1525	2		
R27, R34	Res, var, cermet, 200Ω ±20%, ½W	226050	80294	3329H-1-201	2		
R28, R41	Res, comp, 130Ω ±5%, ¼W	325704	01121	CB1315	2		
R29, R30	Res, comp, 820Ω ±5%, ¼W	148015	01121	CB8215	2		
R31	Res, comp, 91Ω ±5%, ¼W	221887	01121	CB9105	1		
R36	Res, comp, 10Ω ±5%, ¼W	147868	01121	CB1005	1		
R37	Res, comp 270Ω ±10%, 1/8W	261834	01121	BB2711	1		
R38	Res, comp, 270Ω ±5%, ¼W	160804	01121	CB2715	1		

10 MHz STEP LOOP PHASE DETECTOR PCB ASSEMBLY, A6A1

REF DESIG OR ITEM NO.	DESCRIPTION	FLUKE STOCK NO.	MFG FED SPLY CDE	MFG PART NO. OR TYPE	TOT QTY	REC QTY	USE CDE
R39	Res, comp, 180Ω ±5%, ¼W	147942	01121	CB1815	1		
R40	Res, comp, 43Ω ±5%, ¼W	177162	01121	CB4305	1		
R43, R50 R51	Res, comp, 390Ω ±5%, ¼W	147975	01121	CB3915	1		
R44, R45	Res, comp, 10k ±5%, ¼W	148106	01121	CB1005	2		
R46	Res, comp, 2.2k ±5%, ¼W	148049	01121	CB2225	1		
R47, R48	Res, comp, 4.7k ±5%, ¼W	148072	01121	CB4725	2		
R49	Res, comp, 12k ±5%, ¼W	159731	01121	CB1235	1		
R53	Res, comp, 51Ω ±5%, ¼W	221879	01121	CB5105	1		
R54	Res, comp, 110Ω ±5%, ¼W	193474	01121	CB1115	1		
R55	Res, comp, 15k ±5%, ¼W	148114	01121	CB1535	1		
R60	Res, comp, 100Ω ± 10%, 1/8W	261826	01121	BB1011	1		
T1, T2, T3	Transformer	320903	89536	320903	3		
T4	Transformer	338905	89536	338903	1		
U1	IC, TTL, quad 2-input NAND gate	292953	01295	SN7400N	1	1	
U2	IC, Operational amplifier	271502	12040	LM301A	1	1	
U3	IC, mixer, double balance, ring modulator	248260	27956	M6F	1	1	

10 MHz STEP LOOP PHASE DETECTOR PCB ASSEMBLY, A6A1

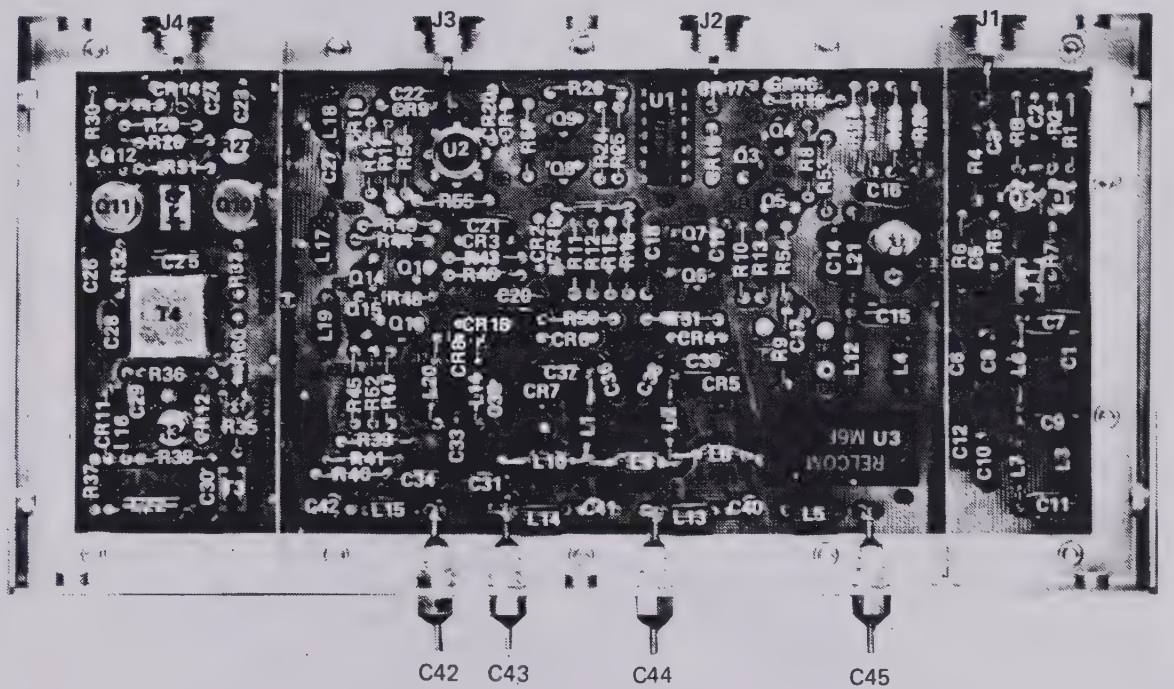

Figure 5-13. 10 MHz STEP LOOP PHASE DETECTOR PCB ASSEBMLY, A6A1

INPUT FILTER MODULE ASSEMBLY, A7

REF DESIG OR ITEM NO.	DESCRIPTION	FLUKE STOCK NO.	MFG FED SPLY CDE	MFG PART NO. OR TYPE	TOT QTY	REC QTY	USE CDE
A7	**INPUT FILTER MODULE ASSEMBLY** **Figure 5-14 6160A-4101**	323667	89536	323667	REF		
A7A1	Input Filter PCB Assembly				1		
1	Module cover, inner	323204	89536	323204	1		
2	Module cover, outer	323212	89536	323212	1		
3	Screw, PNH, Phillips 4 - 40 x ¼	129890	73734	19022	7		
4	Nameplate	329769	89536	329769	1		

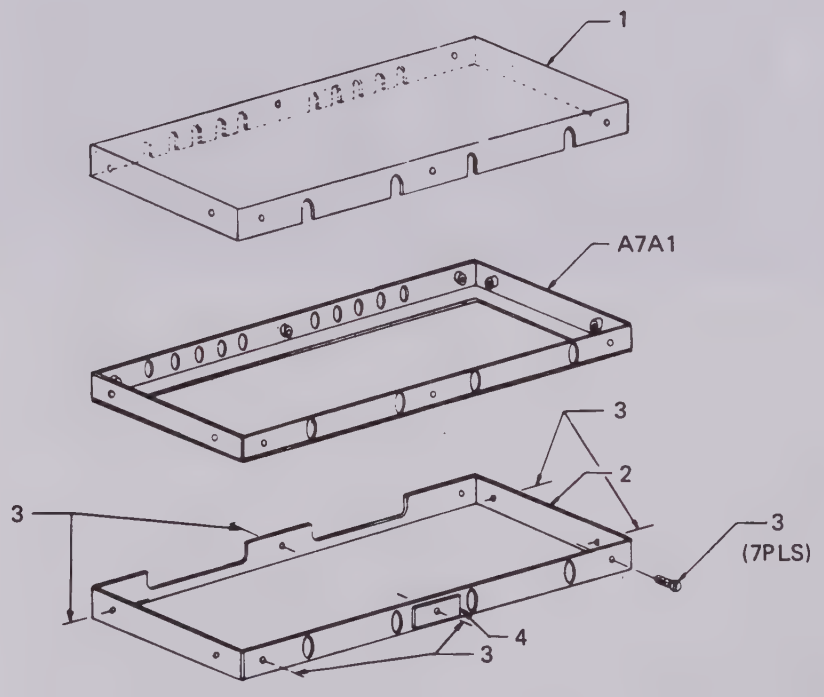

Figure 5-14. INPUT FILTER MODULE ASSEMBLY, A7

INPUT FILTER PCB ASSEMBLY, A7A1

REF DESIG OR ITEM NO.	DESCRIPTION	FLUKE STOCK NO.	MFG FED SPLY CDE	MFG PART NO. OR TYPE	TOT QTY	REC QTY	USE CDE
A7A1	**INPUT FILTER PCB ASSEMBLY** **Figure 5-15 6160A-4001**				REF		
C1,C2 C3,C6, C7,C8, C11, C13, C16, C18, C21, C22, C25 thru C28	Cap, cer, 0.05 uf +80/-20%, 25V	148924	72982	5855-&5U-5032	16		
C29 thru C31	Cap, feed-thru, 2500 pf, 500V	248286	04222	BSF-1BB	3		
C4	Cap, mica, 510 pf ±5%, 500V	148411	53021	CD15E511J	1		
C5	Cap, mica, 150 pf ±5%, 500V	148478	53021	CD15F151J	1		
C10, C14, C19	Cap, mica, 220 pf ±5%, 500V	170423	53021	CD15F221J	3		
C12, C17	Cap, mica, 560 pf ±5%, 500V	170431	53021	CD19F561J	2		
C20	Cap, mica, 1000 pf ±5%, 500V	148387	53021	CD19F102J	1		
C23	Cap, mica, 1500 pf ±5%, 500V	148361	53021	CD19F152J	1		
C24	Cap, mica, 390 pf ±5%, 500V	148437	53021	CD15F391J	1		
CR1	Diode, silicon, 150 mA	203323	03508	1N4148	1	1	
CR2, CR3	Diode, germanium, 80 mA, 100 piv	149187	93332	1N270	2	1	
J1 thru J4	Connector, male, coaxial	207639	13511	27-875	4		
L1	Inductor, 0.75 uh	204891	89536	204891	1		
L2	Coil	173013	89536	173013	1		
L3,L4 L7	Inductor, 1000 uh ±10%, 40 mA	256107	24759	MR-1000	3		

INPUT FILTER PCB ASSEMBLY, A7A1

REF DESIG OR ITEM NO.	DESCRIPTION	FLUKE STOCK NO.	MFG FED SPLY CDE	MFG PART NO. OR TYPE	TOT QTY	REC QTY	USE CDE
R29	Res, comp, 330Ω ±5%, ¼W	147967	01121	CB3315	1		
R30	Res, comp, 560Ω ±5%, ¼W	147991	01121	CB5615	1		
R32	Res, comp, 2k ±5%, ¼W	202879	01121	CB2025	1		
R33	Res, comp, 150Ω ±5%, ¼W	147934	01121	CB1515	1		
T1,T2	Transformer, var, nom, 2.5 uh	254201	89536	254201	2		
T3	Transformer, 4.2 uh	173021	89536	173021	1		
U1	IC, TTL, quad 2-input NAND gate	292953	01295	SN7400N	1	1	
Y1, Y2	Crystal, 5 MHz	255927	71450	H17-019-0589	2		
	Holder, crystal	148668	91506	8000-AG-10	2		
	Socket, IC, 14 contact	276527	23880	TSA-2900-14W	2		
	Spacer, Xstr mtg. Pad T 0-5	152207	Milton Ross	10123-DAP	5		

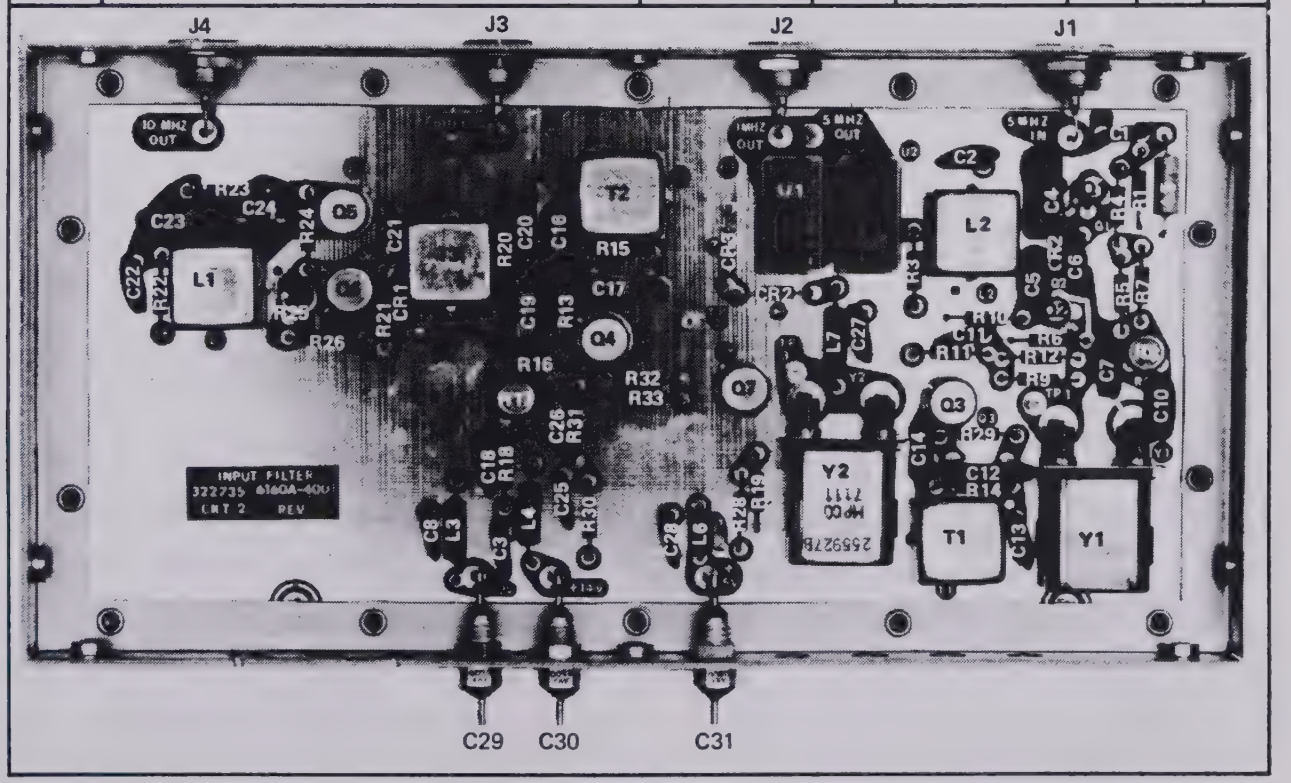

Figure 5-15. INPUT FILTER PCB ASSEMBLY, A7A1

1 - 100 kHz DIGITAL UNIT PCB ASSEMBLY, A16

REF DESIG OR ITEM NO.	DESCRIPTION	FLUKE STOCK NO.	MFG FED SPLY CDE	MFG PART NO. OR TYPE	TOT QTY	REC QTY	USE CDE
C46, C55, C71, C102, C108, C135, C142, C177, C183	Cap, Ta, 2.2 uf ±20%, 20V	161927	56289	196D225X0020	9		
C56, C69, C101, C128, C140, C170	Cap, elect, 20 uf +50/−10%, 16V	241356	73445	C426A4E20	6		
C63, C65, C118, C185	Cap, mica, 62 pf ±5%, 500V	276469	14655	CD15F620J	4		
C64, C130	Cap, plstc, 0.022 uf ±10%, 50V	271577	06001	75F1R5A222	2		
C66	Cap, mica, 160 pf ±5%, 500V	321000	14655	CD15F161J	1		
C67, C98, C119, C136, C172, C176, C187	Cap, mica, 430 pf ±5%, 500V	177980	14655	CD15F431J	7		
C70, C143	Cap, mica, 470 pf ±5%, 500V	148429	14655	CD19F471J	2		
C88, C95	Cap, mica, 270 pf ±5%, 500V	148452	14655	CD15F271J	2		
C94	Cap, mica, 1800 pf ±5%, 500V	148353	14655	CD19F182J	1		
C97	Cap, mica, 68 pf ±5%, 500V	148510	14655	CD15F680J	1		
C120, C186	Cap, mica, 22 pf ±5%, 500V	148551	14655	CD15E220J	2		
C121, C188	Cap, mica, 360 pf ±5%, 500V	325878	14655	CD15F361J	2		
C133	Cap, mica, 33 pf ±5%, 500V	160317	14655	CD15E330J	1		

INPUT FILTER PCB ASSEMBLY, A7A1

REF DESIG OR ITEM NO.	DESCRIPTION	FLUKE STOCK NO.	MFG FED SPLY CDE	MFG PART NO. OR TYPE	TOT QTY	REC QTY	USE CDE
R29	Res, comp, 330Ω ±5%, ¼W	147967	01121	CB3315	1		
R30	Res, comp, 560Ω ±5%, ¼W	147991	01121	CB5615	1		
R32	Res, comp, 2k ±5%, ¼W	202879	01121	CB2025	1		
R33	Res, comp, 150Ω ±5%, ¼W	147934	01121	CB1515	1		
T1,T2	Transformer, var, nom, 2.5 uh	254201	89536	254201	2		
T3	Transformer, 4.2 uh	173021	89536	173021	1		
U1	IC, TTL, quad 2-input NAND gate	292953	01295	SN7400N	1	1	
Y1, Y2	Crystal, 5 MHz	255927	71450	H17-019-0589	2		
	Holder, crystal	148668	91506	8000-AG-10	2		
	Socket, IC, 14 contact	276527	23880	TSA-2900-14W	2		
	Spacer, Xstr mtg. Pad T 0-5	152207	Milton Ross	10123-DAP	5		

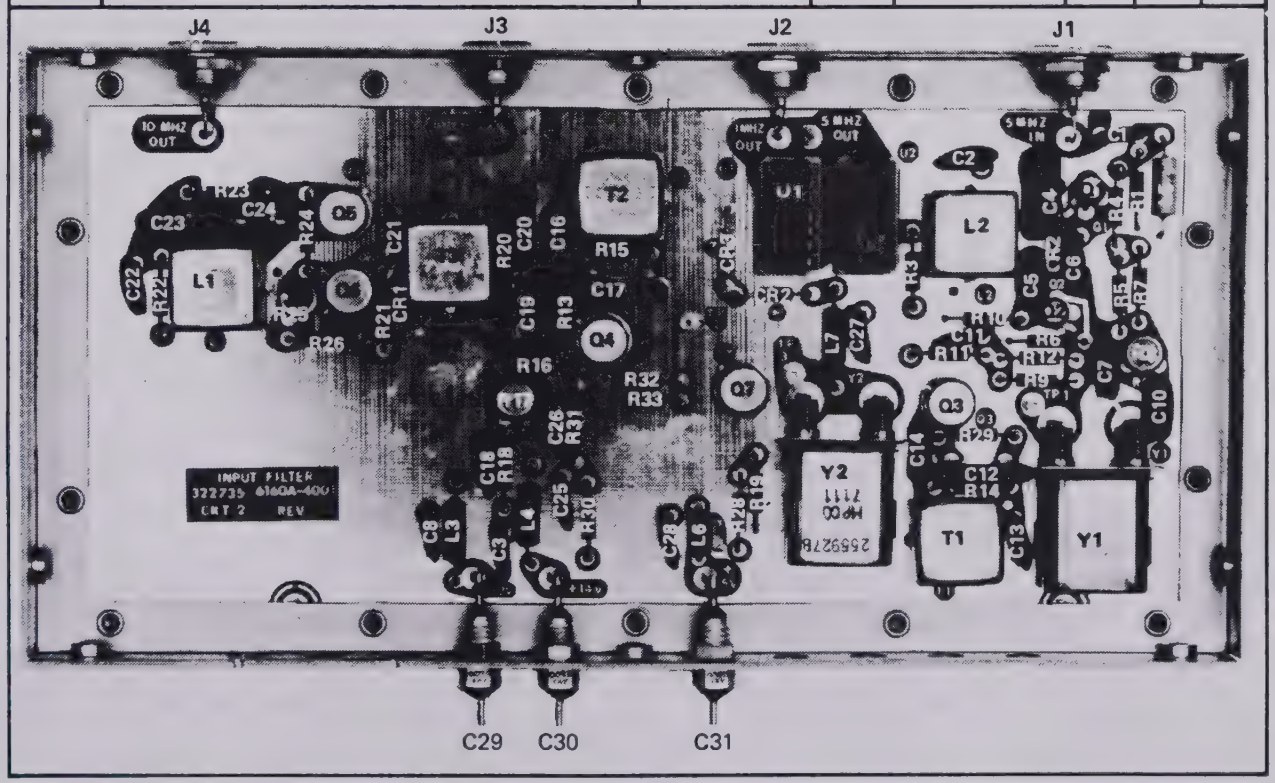

Figure 5-15. INPUT FILTER PCB ASSEMBLY, A7A1

1 - 100 kHz DIGITAL UNIT PCB ASSEMBLY, A16

DESCRIPTION	FLUKE STOCK NO.	MFG FED SPLY CDE	MFG PART NO. OR TYPE	TOT QTY	REC QTY	USE CDE	C Y	USE CDE
ap, Ta, 2.2 uf ±20%, 20V	161927	56289	196D225X0020	9				
ıp, elect, 20 uf +50/−10%, 16V	241356	73445	C426A4E20	6				
ıp, mica, 62 pf ±5%, 500V	276469	14655	CD15F620J	4				
p, plstc, 0.022 uf ±10%, 50V	271577	06001	75F1R5A222	2				
p, mica, 160 pf ±5%, 500V	321000	14655	CD15F161J	1				
p, mica, 430 pf ±5%, 500V	177980	14655	CD15F431J	7				
p, mica, 470 pf ±5%, 500V	148429	14655	CD19F471J	2				
p, mica, 270 pf ±5%, 500V	148452	14655	CD15F271J	2				
p, mica, 1800 pf ±5%, 500V	148353	14655	CD19F182J	1				
p, mica, 68 pf ±5%, 500V	148510	14655	CD15F680J	1				
p, mica, 22 pf ±5%, 500V	148551	14655	CD15E220J	2				
ı, mica, 360 pf ±5%, 500V	325878	14655	CD15F361J	2				
ı, mica, 33 pf ±5%, 500V	160317	14655	CD15E330J	1				

1 MHz STEP LOOP PCB ASSEMBLY, A8A1

REF DESIG OR ITEM NO.	DESCRIPTION	FLUKE STOCK NO.	MFG FED SPLY CDE	MFG PART NO. OR TYPE	TOT QTY	REC QTY	USE CDE
A8A1	**1 MHz STEP LOOP PCB ASSEMBLY** **Figure 5-17 6160A-4003**				REF		
C1 thru C4,C6, C7,C10, C11, C25, C27 thru C34	Cap, cer, 0.05 uf +80/−20%, 25V	148924	72982	5855-Y5U-5032	16		
C5	Cap, Ta, 68 uf ±10%, 15V	193615	56289	196D686X0015	1		
C8,C9, C18, C19, C20, C24	Cap, Ta, 2.2 uf ±20%, 20V	161927	56289	196D225X0020	6		
C12	Cap, plstc, 0.047 uf ±10%, 50V	271858	06001	75F1R5A474	1		
C13	Cap, mica, 180 pf ±5%, 500V	148460	14655	CD15F181J	1		
C14	Cap, mica, 27 pf ±5%, 500V	177998	14655	CD15E270J	1		
C15	Cap, mica, 430 pf ±5%, 500V	177980	14655	CD15F431J	1		
C16	Cap, mica, 100 pf ±5%, 500V	148494	14655	CD15F101J	1		
C17, C21	Cap, mica, 270 pf ±5%, 500V	148452	14655	CD15F270J	2		
C22	Cap, mica, 82 pf ±1%, 500V	271957	14655	CD15F820J	1		
C23	Cap, mica, 470 pf ±5%, 500V	148429	14655	CD19F471J	1		
C26, C35	Cap, cer 0.0012 uf ±10%, 500V	106732	71590	CF-122	2		
C36, C37, C38	Cap, var, cer, 4.5 to 50 pf +70/−20%, 250V	321117	73899	DVJ305A	3		
C39 thru C46	Cap, feed thru, 2500 pf, 500V	248286	04222	BSF-11B	7		
CR1, CR4, CR7, CR12	Diode, hot carrier	313247	28480	5082-2811	4		

1 MHz STEP LOOP PCB ASSEMBLY, A8A1

REF DESIG OR ITEM NO.	DESCRIPTION	FLUKE STOCK NO.	MFG FED SPLY CDE	MFG PART NO. OR TYPE	TOT QTY	REC QTY	USE CDE
CR5, CR6, CR8	Diode, silicon, 150 mA	203323	03508	DHD1105	3		
CR3	Diode, zener, 5.6V	277236	07910	1N752A	1		
CR9	Diode, zener	330621	07910	333580	1		
CR10, CR11	Diode, tuning, hyper-abrupt	320200	KEV.	KV2001 ELECT.	2		
J1, J3, J4	Connector, male, coaxial	207639	13511	27-875	3		
L1, L2, L3, L6 thru L12, L16	Bead, 6 turn	320911	89536	320911	11		
L4,L5	Bead, ferrite	219535	02114	56-060-85-3B	2		
L13	Choke, 180 uh ±5%, 300 mA	174771	72259	WEE-180	1		
L14	Inductor, 220 uh ± 5%, 280 mA	147835	72259	WEE-220	1		
L15	Inductor, 270 uh ±5%, 260 mA	186270	72259	WEE-270	1		
Q1,Q2	Xstr, Si, NPN	218396	04713	2N3904	2		
Q3,Q4	Xstr, Si, PNP	195974	04713	2N3906	2		
Q5, Q10, Q11	Xstr, Si, PNP	226290	04713	MPS3640	3		
Q6 thru Q9	Xstr, Si, NPN	248351	04713	MPS918	4		
R1,R2	Res, comp, 22 ±5%, ¼W	147884	01121	CB2205	2		
R3	Res, comp, 270 ±5%, ¼W	160804	01121	CB2715	2		
R4,R6, R10, R27, R38	Res, comp, 100 ±5%, ¼W	147926	01121	CB1015	5		
R5	Res, met film, 4.12k ±1%, 1/8W	235341	91637	MFF1-84121F	1		
R7	Res, comp, 8.2k ±5%, ¼W	160796	01121	CB8225	1		

1 MHz STEP LOOP PCB ASSEMBLY, A8A1

REF DESIG OR ITEM NO.	DESCRIPTION	FLUKE STOCK NO.	MFG FED SPLY CDE	MFG PART NO. OR TYPE	TOT QTY	REC QTY	USE CDE
R9, R15, R42	Res, met flm, 2.15k ±1%, 1/8W	293712	91637	MFF1-82151F	3		
R11	Res, met flm, 619 ±1%, 1/8W	313072	91637	MFF1-86190F	1		
R13	Res, met flm, 732 ±1%, 1/8W	294884	91637	MFF1-87320F	1		
R14	Res, met flm, 6.81k ±1%, 1/8W	268417	91637	MFF1-86811F	1		
R16, R19	Res, comp, 470 ±5%, ¼W	147983	01121	CB4705	2		
R17	Res, comp, 2k ±5%, ¼W	202879	01121	CB2025	1		
R18	Res, comp, 68 ±5%, ¼W	147918	01121	CB6805	1		
R20	Res, comp, 270 ±5%, ¼W	160804	01121	CB2715	1		
R21	Res, comp, 2.2k ±5%, ¼W	148049	01121	CB2225	1		
R22, R37, R41	Res, comp, 150 ±5%, ¼W	147934	01121	CB1515	3		
R23	Res, comp, 1.8k ±5%, ¼W	175042	01121	CB1825	1		
R24	Res, comp, 1k ±5%, ¼W	148023	01121	CB1025	1		
R25	Res, met flm, 1.69k ±1%, 1/8W	321414	91637	MFF1-81691F	1		
R26	Res, met flm, 523 ±1%, 1/8W	294835	91637	MFF1-85230F	1		
R28	Res, comp, 390 ±5%, ¼W	147975	01121	CB3915	1		
R29	Res, comp, 82 ±5%, ¼W	149484	01121	CB8205	1		
R30	Res, comp, 47 ±5%, ¼W	147892	01121	CB4705	1		
R31, R39	Res, comp, 820 ±5%, ¼W	148015	01121	CB8215	2		
R32	Res, comp, 130 ±5%, ¼W	325704	01121	CB1315	1		
R33	Res, comp, 39 ±5%, ¼W	193391	01121	CB3905	1		
R34	Res, met flm, 1.54k ±1%, 1/8W	289066	91637	MFF1-81541F	1		
R35	Res, met flm, 2k ±1%, 1/8W	235226	91637	MFF1-8202F	1		
R36	Res, comp, 750 ±5%, ¼W	218024	01121	CB7515	1		
R40	Res, comp, 680 ±5%, ¼W	148007	01121	CB6815	1		
R43	Res, met flm, 4.02k ±1%, 1/8W	235325	91637	MFF1-84021F	1		
R44	Res, comp, 15 ±10%, 1/8W	261800	01121	BB1501	1		

1 MHz STEP LOOP PCB ASSEMBLY, A8A1

REF DESIG OR ITEM NO.	DESCRIPTION	FLUKE STOCK NO.	MFG FED SPLY CDE	MFG PART NO. OR TYPE	TOT QTY	REC QTY	USE CDE
T1	Transformer	324392	89536	324392	1		
T2	Transformer	321067	89536	321067	1		
U1	IC, TTL, 35 MHz, presettable decade and binary counter	320747	01295	SN74176N	1		
U2	IC, TTL, phase-frequency detector	320721	04713	MC4044P	1		
U3	IC, TTL, quad 2-input positive NAND gate	293068	01295	SN74H00N	1		
U4	IC, TTL, dual J-K edge triggered flip-flop	293100	01295	SN74H106N	1		
U5	IC, TTL, dual 4-input positive NAND gate	320788	01295	SN74H20N	1		
U6	IC, TTL, 50 MHz presettable decade and binary counter	320770	01295	SN74197N	1		
U7	IC, DTL, hex inverter	268367	04713	MC836P	1		
U8	IC, 70 MHz, AC coupled J-K flip-flop	226340	04713	MC1013P	1		
	Socket, IC, 14 pin contact	276527	23880	TSA-2900-14W	3		
	Socket, IC, 16 pin contact	276535	23880	TSA-2900-16W	1		

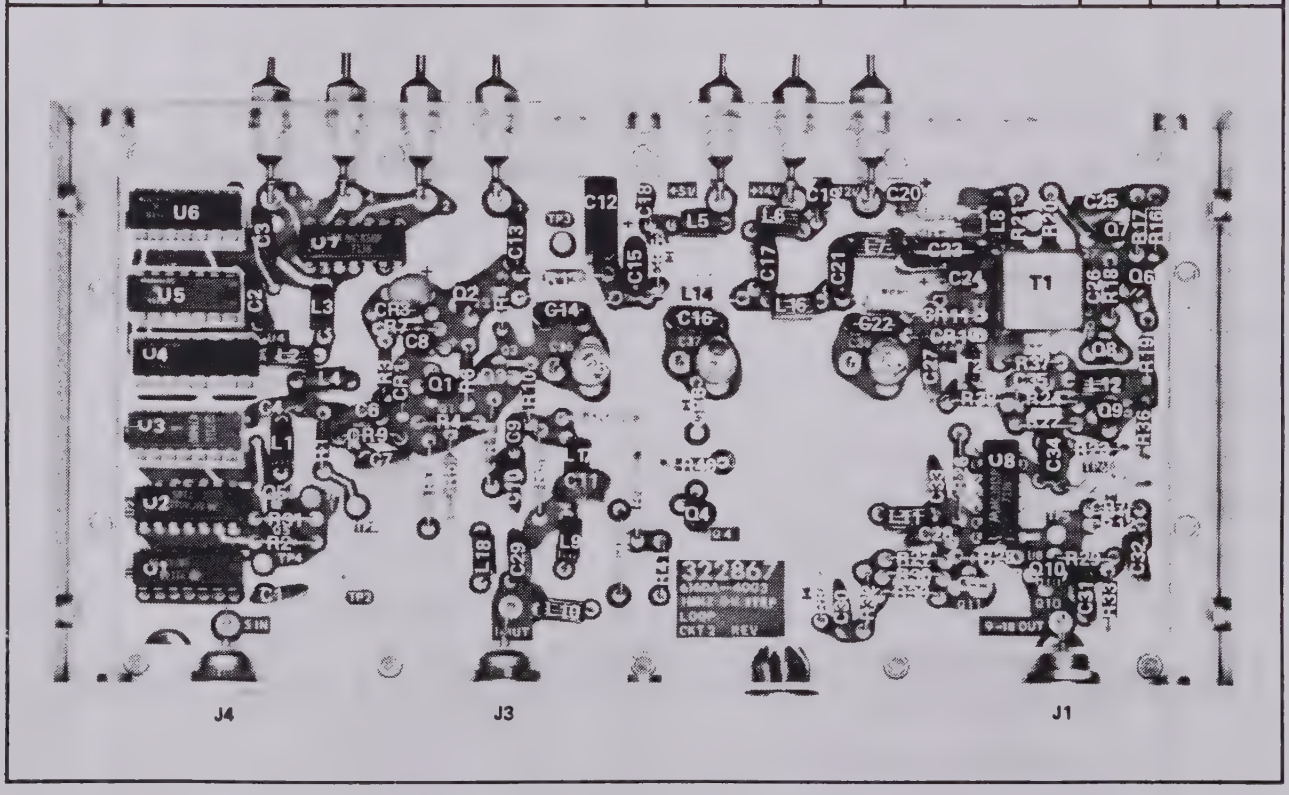

Figure 5-17. 1 MHz STEP LOOP PCB ASSEMBLY, A8A1

1 MHz I.F. MIXER MODULE ASSEMBLY, A9

REF DESIG OR ITEM NO.	DESCRIPTION	FLUKE STOCK NO.	MFG FED SPLY CDE	MFG PART NO. OR TYPE	TOT QTY	REC QTY	USE CDE
A9	**1 MHz I.F. MIXER MODULE ASSEMBLY** **Figure 5-18 6160A-4104**	323683	89536	323683	REF		
A9A1	1 MHz I.F. Mixer PCB Assembly				1		
1	Module cover, inner	323204	89536	323204	1		
2	Module cover, outer	323212	89536	323211	1		
3	Screw, 4 - 40 x ¼ PNH - Phillips	129890	73734	19022	7		
4	Nameplate	329185	89536	329185	1		

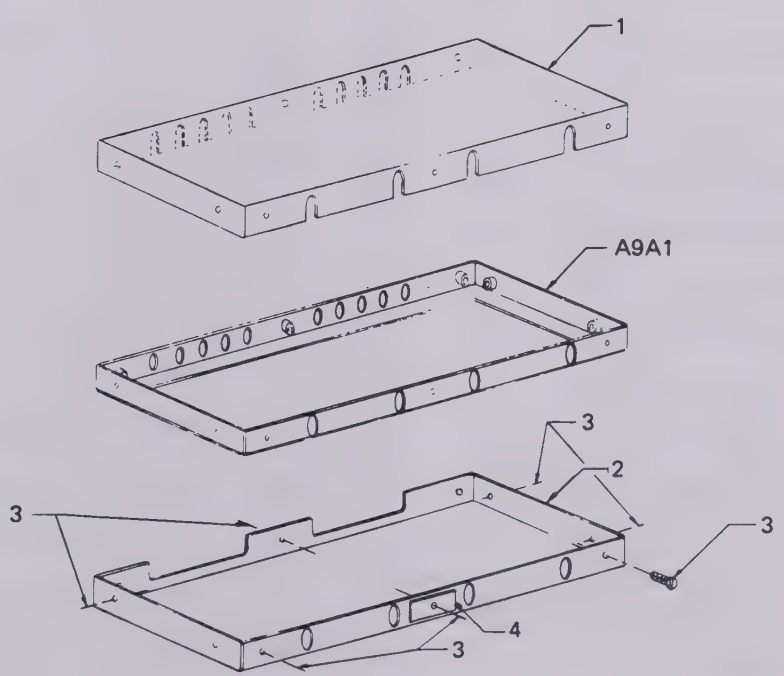

Figure 5-18. 1 MHz I.F. MIXER MODULE ASSEMBLY, A9

1 MHz I.F. MIXER PCB ASSEMBLY, A9A1

REF DESIG OR ITEM NO.	DESCRIPTION	FLUKE STOCK NO.	MFG FED SPLY CDE	MFG PART NO. OR TYPE	TOT QTY	REC QTY	USE CDE
A9A1	**1 MHz I.F. MIXER PCB ASSEMBLY**				REF		
	Figure 5-19 6160A-4004						
C1,C32	Cap, Ta, 2.2 uf ±20%, 20V	161927	56289	196D225X0020	2		
C2,C3, C4, C20, C21, C23, C25, C26, C28 thru C31, C34	Cap, cer, 0.05 uf +80/−20%, 25V	148924	72982	5855-Y5U-5032	13		
C5,C14	Cap, mica, 270 pf ±5%, 500V	148452	14655	CD15F271J	2		
C6	Cap, mica, 47 pf ±5%, 500V	148536	14655	CD15E470J	1		
C7	Cap, mica, 360 pf ±5%, 500V	325878	14655	CD15F361J	1		
C8,C13	Cap, mica, 130 pf ±5%, 500V	266205	14655	CD15F130J	2		
C9,C35	Cap, mica, 220 pf ±5%, 500V	170423	14655	CD15F220J	2		
C10	Cap, mica, 330 pf ±5%, 500V	148445	14655	CD15F331J	1		
C11, C19	Cap, mica, 390 pf ±5%, 500V	148437	14655	CD15F391J	2		
C12	Cap, mica, 51 pf ±5%, 500V	277210	14655	CD15E510J	1		
C15	Cap, mica, 110 pf ±1%, 500V	170415	14655	CD15F111F	1		
C16	Cap, mica, 510 pf ±5%, 500V	148411	14655	CD15E511J	1		
C17	Cap, mica, 470 pf ±5%, 500V	148429	14655	CD19F471J	1		
C18	Cap, mica, 82 pf ±1%, 500V	271957	14655	CD15F820F	1		
C22, C24	Cap, mica, 68 pf ±5%, 500V	148510	14655	CD15F680J	2		
C27	Cap, plstc, 0.01 uf ±10%, 250V	325548	73445	C280AE1A10K	1		
C33	Cap, cer, 4.5 to 50 pf +70/−20%, 250V	321117	73899	DVJ305A	1		
C36	Cap, cer, 0.0012 uf ±10%, 500V	106732	71590	CF-122	1		
C37, C38	Cap, mica, 150 pf ±5%, 500V	148478	14655	CD15F151J	2		

1 MHz I.F. MIXER PCB ASSEMBLY, A9A1

REF DESIG OR ITEM NO.	DESCRIPTION	FLUKE STOCK NO.	MFG FED SPLY CDE	MFG PART NO. OR TYPE	TOT QTY	REC QTY	USE CDE
C39, C40	Cap, feed thru, 2500 pf, 500V	248286	04222	248286	2		
CR1	Diode, silicon, 150 mA	203323	03508	1N4148	1		
J1, J3, J4	Connector, male, coaxial	207639	13511	27-875	3		
L1,L3, L13	Inductor, 0.33 uh ±10%, 1400 mA	261743	24759	MR-0.33	3		
L2	Inductor, 0.22 uh ±10%, 2050 mA	261735	24759	MR-0.22	1		
L4	Inductor, 0.27 uh ±10%, 1625 mA	313031	24759	MR-0.27	1		
L5,L6, L8	Inductor, 8.2 uh ±10%, 535 mA	313049	24759	MR-8.2	3		
L7	Choke, 33 uh ±5%, 520 mA	207563	72259	WEE-33	1		
L9,L10, L11,L12	Bead, 6 turn	320911	89536	320911	4		
Q1, Q2	Xstr, Si, PNP	226290	04713	MPS3640	2		
Q3	Xstr, Si, NPN	218396	04713	2N3904	1		
Q4 thru Q8	Xstr, Si, PNP	195974	04713	2N3906	5		
R1	Res, comp, 180 ±5%, ½W	108944	01121	EB1815	1		
R2,R4	Res, comp, 2.2k ±5%, ¼W	148049	01121	CB3325	2		
R3,R7	Res, comp, 56 ±5%, ¼W	147900	01121	CB5605	2		
R5,R6, R8,R10, R16, R27	Res, comp, 120 ±5%, ¼W	170712	01121	CB1215	6		
R9	Res, comp, 47 ±10%, 1/8W	272211	01121	BB4701	1		
R11	Res, comp, 240 ±5%, ¼W	221895	01121	CB2415	1		
R12	Res, comp, 470 ±5%, ¼W	147983	01121	CB4715	1		
R13, R14, R17	Res, comp, 1k ±5%, ¼W	148023	01121	CB1025	3		
R15, R24, R26, R29	Res, comp, 3.3k ±5%, ¼W	148056	01121	CB3325	4		

1 MHz I.F. MIXER PCB ASSEMBLY, A9A1

REF DESIG OR ITEM NO.	DESCRIPTION	FLUKE STOCK NO.	MFG FED SPLY CDE	MFG PART NO. OR TYPE	TOT QTY	REC QTY	USE CDE
R18	Res, comp, 33 ±5%, ¼W	175034	01121	CB3305	1		
R19, R21, R28	Res, comp, 1.8k ±5%, ¼W	175042	01121	CB1825	3		
R20, R23	Res, comp, 220 ±5%, ¼W	147959	01121	CB2215	2		
R22, R30, R31, R32	Res, comp, 390 ±5%, ¼W	147975	01121	CB3915	4		
R25	Res, comp, 680 ±5%, ¼W	148007	01121	CB6815	1		
T1	Transformer, 8 turn	321067	89536	321067	1		
U1	Mixer, double balanced	320887	27956	M6K	1		

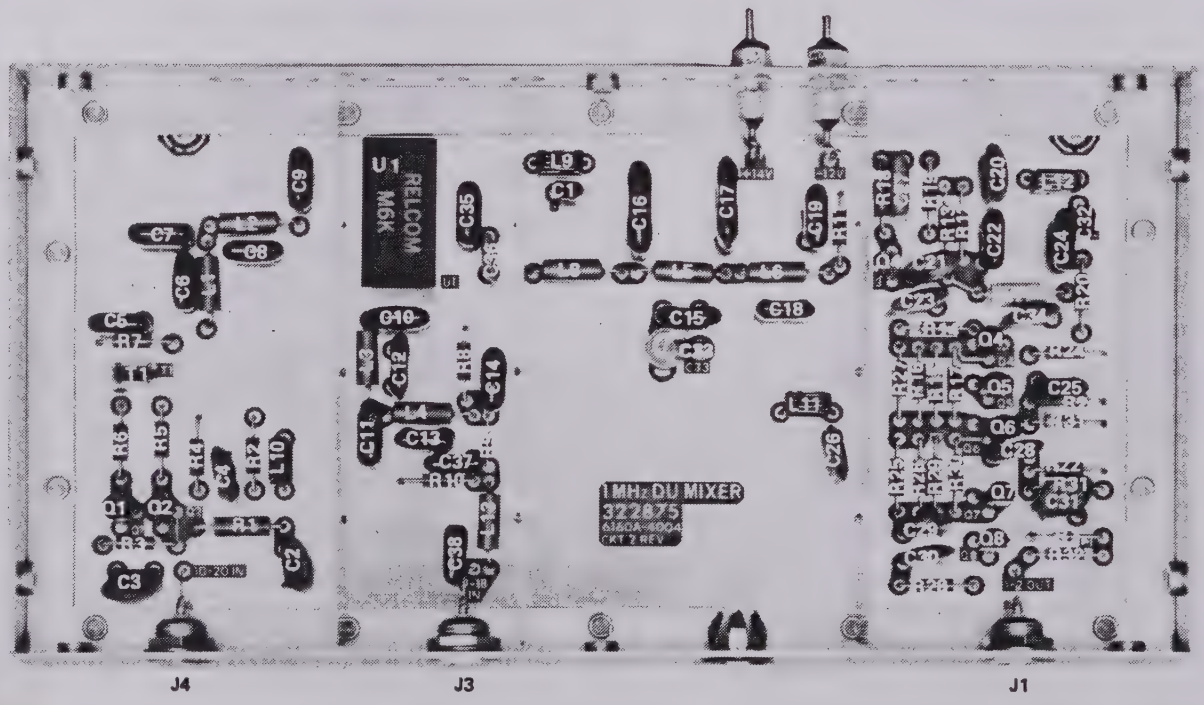

Figure 5-19. 1MHz I.F. MIXER PCB ASSEMBLY, A9A1

1 MHz MAIN LOOP MODULE ASSEMBLY, A10

REF DESIG OR ITEM NO.	DESCRIPTION	FLUKE STOCK NO.	MFG FED SPLY CDE	MFG PART NO. OR TYPE	TOT QTY	REC QTY	USE CDE
A10	**1 MHz MAIN LOOP MODULE ASSEMBLY**	323691	89536	323691	REF		
	Figure 5-20 6160A-4105						
A10A1	1 MHz Main Loop PCB Assembly				1		
1	Module cover, inner	323204	89536	323204	1		
2	Module cover, outer	323212	89536	323211	1		
3	Screw, 4-40 x ¼ PNH - Phillips	129890	73734	19022	7		
4	Nameplate	329193	89536	329193	1		

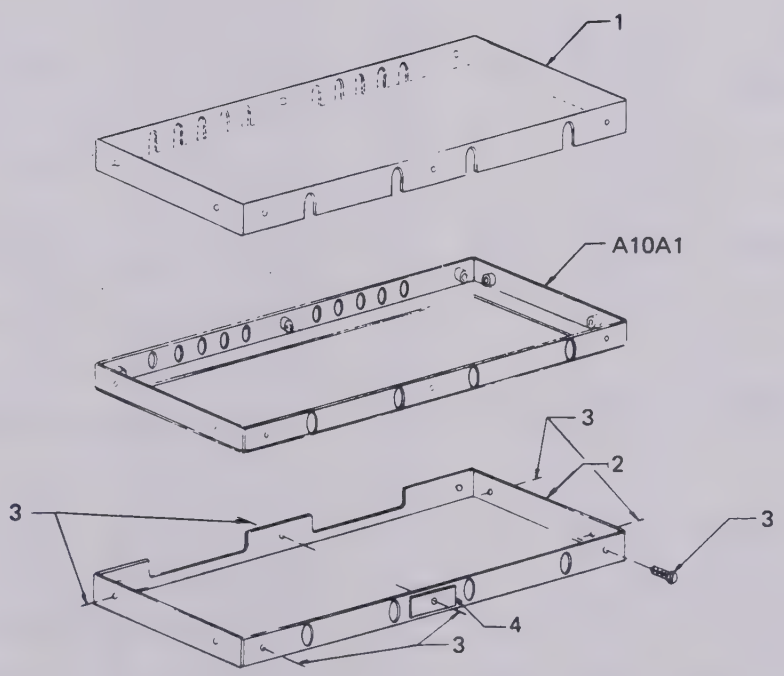

Figure 5-20. 1 MHz MAIN LOOP MODULE ASSEMBLY, A10

1 MHz MAIN LOOP PCB ASSEMBLY, A10A1

REF DESIG OR ITEM NO.	DESCRIPTION	FLUKE STOCK NO.	MFG FED SPLY CDE	MFG PART NO. OR TYPE	TOT QTY	REC QTY	USE CDE
A10A1	**1 MHz MAIN LOOP PCB ASSEMBLY** **Figure 5-21 6160A-4005**						
C1,C8, C9	Cap, Ta, 2.2 uf ±20%, 20V	161927	56289	196D225X0020	3		
C2,C3, C24	Cap, Ta, 10 uf ±20%, 15V	193623	56289	196D106X0015	3		
C4 thru C7, C10, C13 thru C17, C26 thru C31, C33, C34	Cap, cer, 0.0012 uf ±10%, 500V	148924	72982	5855-Y5U-5032	18		
C11	Cap, plstc, 0.47 uf ±10%, 50V	271585	06001	75F1R5A474	1		
C12	Cap, mica, 200 pf ±1%, 500V	284794	14655	CD15F201F	1		
C18	Cap, mica, 91 pf ±5%, 500V	277228	14655	CD15E910J	1		
C19	Cap, mica, 270 pf ±5%, 500V	148452	14655	CD15F271J	1		
C20	Cap, mica, 180 pf ±5%, 500V	148460	14655	CD15F181J	1		
C21	Cap, var, 4.5 to 50 pf +70/–20%, 250V	321117	73899	DVJ305A	1		
C22	Cap, mica, 1200 pf ±5%, 500V	148379	14655	CD19F122J	1		
C23	Cap, mica, 1300 pf ±5%, 500V	182881	14655	CD19F132J	1		
C25	Cap, plstc, 0.027 uf ±10%, 250V	267120	73445	C280AE/A27K	1		
C35 thru C41	Cap, feed thru, 2500 pf, 500V	248286	04222	248286	7		
C32	Cap, cer, 0.0012 uf ±10%, 500V	106732	71590	CF-122	1		
CR1 thru CR7, CR9, CR10, CR12, CR13	Diode, silicon, 150 mA	203323	03508	DHD1105	11		

1 MHz MAIN LOOP PCB ASSEMBLY, A10A1

REF DESIG OR ITEM NO.	DESCRIPTION	FLUKE STOCK NO.	MFG FED SPLY CDE	MFG PART NO. OR TYPE	TOT QTY	REC QTY	USE CDE
CR8, CR11, CR14, CR15	Diode, hot carrier	313247	28480	5082-2811	4		
CR16, CR17	Diode, tuning, hyper-abrupt	320200	KEV	KV2001	2		
J1 thru J4	Connector, male, coaxial	207639	13511	27-875	4		
L1 thru L11, L14 thru L17	Bead, 6 turn	320911	89536	320911	15		
L12, L13	Choke, 120 uh ±5%, 330 mA	321042	72259	WEE-120	2		
Q1 thru Q5, Q7, Q18	Xstr, Si, PNP	195974	04713	2N3906	7		
Q6,Q8 thru Q12, Q21, Q22	Xstr, Si, NPN	218396	04713	2N3904	8		
Q13 thru Q17, Q19, Q20	Xstr, Si, PNP	226290	04713	MPS3640	7		
Q23, Q24	Xstr, Si, NPN	248351	04713	MPS918	2		
R1,R2, R3	Res, met film, 2.55k ±1%, 1/8W	325498	91637	MFF1-82551F	3		
R4	Res, met film, 5.11k ±1%, 1/8W	294868	91637	MFF1-85111F	1		
R5	Res, met film, 10.2k ±1%, 1/8W	293605	91637	MFF1-81021F	1		
R6	Res, met film, 6.04k ±1%, 1/8W	285189	91637	MFF1-86041F	1		

1 MHz MAIN LOOP PCB ASSEMBLY, A10A1

REF DESIG OR ITEM NO.	DESCRIPTION	FLUKE STOCK NO.	MFG FED SPLY CDE	MFG PART NO. OR TYPE	TOT QTY	REC QTY	USE CDE
R7, R12, R18, R20, R31, R44, R52, R54	Res, comp, 1.8k ±5%, ¼W	175042	01121	CB1825	8		
R8	Res, var, cermet, 10k ±20%, ½W	226092	80394	3329H-1-103	1		
R9,R19	Res, met film, 2.74k ±1%, 1/8W	293761	91637	MFF1-82741F	2		
R10, R34	Res, met film, 1k ±1%, 1/8W	168229	91637	MFF1-8102F	2		
R13	Res, met film, 422 ±1%, 1/8W	288506	91637	MFF1-84220F	1		
R14	Res, comp, 47 ±5%, ¼W	147892	01121	CB4705	1		
R15	Res, met film, 499 ±1%, 1/8W	168211	91637	MFF1-84990F	1		
R16	Res, var, cermet, 500 ±20%, ½W	226068	80294	3329H-1-501	1		
R17, R34, R53	Res, comp, 1k ±5%, ¼W	148023	01121	CB1025	3		
R21 thru R24	Res, comp, 560 ±5%, ¼W	147991	01121	CB5615	4		
R25, R26	Res, comp, 4.7k ±5%, ¼W	148072	01121	CB4725	2		
R27, R28, R56, R63	Res, comp, 150 ±5%, ¼W	147934	01121	CB1515	4		
R29	Res, comp, 2.7k ±5%, ¼W	170720	01121	CB2725	1		
R30, R39, R60	Res, comp, 2k ±5%, ¼W	202879	01121	CB2025	3		
R32	Res, comp, 3.3k ±5%, ¼W	148056	01121	CB3325	1		
R33, R48, R59	Res, comp, 270 ±5%, ¼W	160804	01121	CB2715	3		
R35	Res, comp, 330 ±5%, ¼W	147967	01121	CB3315	1		

1 MHz MAIN LOOP PCB ASSEMBLY, A10A1

REF DESIG OR ITEM NO.	DESCRIPTION	FLUKE STOCK NO.	MFG FED. SPLY CDE	MFG PART NO. OR TYPE	TOT QTY	REC QTY	USE CDE
R36, R37, R57, R61	Res, comp, 470 ±5%, ¼W	147983	01121	CB4715	4		
R38	Res, comp, 1.2k ±5%, ¼W	190371	01121	CB1225	1		
R40, R41, R46, R47	Res, comp, 82 ±5%, ¼W	149484	01121	CB8205	4		
R42, R51	Res, comp, 220 ±5%, ¼W	147959	01121	CB2215	2		
R43	Res, comp, 56 ±5%, ¼W	147900	01121	CB5605	1		
R45	Res, comp, 51 ±5%, ¼W	221879	01121	CB5105	1		
R49	Res, met flm, 523 ±1%, 1/8W	294835	91637	MFF1-85230F	1		
R50	Res, met flm, 1.69k ±1%, 1/8W	321414	91637	MFF1-81691F	1		
R55	Res, comp, 750 ±5%, ¼W	218024	01121	CB7515	1		
R58	Res, comp, 2.2k ±5%, ¼W	148049	01121	CB2225	1		
R62	Res, comp, 68 ±5%, ¼W	147918	01121	CB6805	1		
T1	Transformer	324350	89536	324350	1		
T2	Transformer	321067	89536	321067	1		
U1	IC, TTL, quad 2-input, positive NAND gate	293068	01295	SN74H00N	1		
U2	IC, TTL, phase frequency detector	320721	04713	MC4044P	1		
U3	IC, TTL, 35 MHz, presettable decade and binary counter	320747	01295	SN74176N	1		
U4	IC, 70 MHz, AC coupled J-K flip-flop	226340	04713	MC1013P	1		

1 MHz MAIN LOOP PCB ASSEMBLY, A10A1

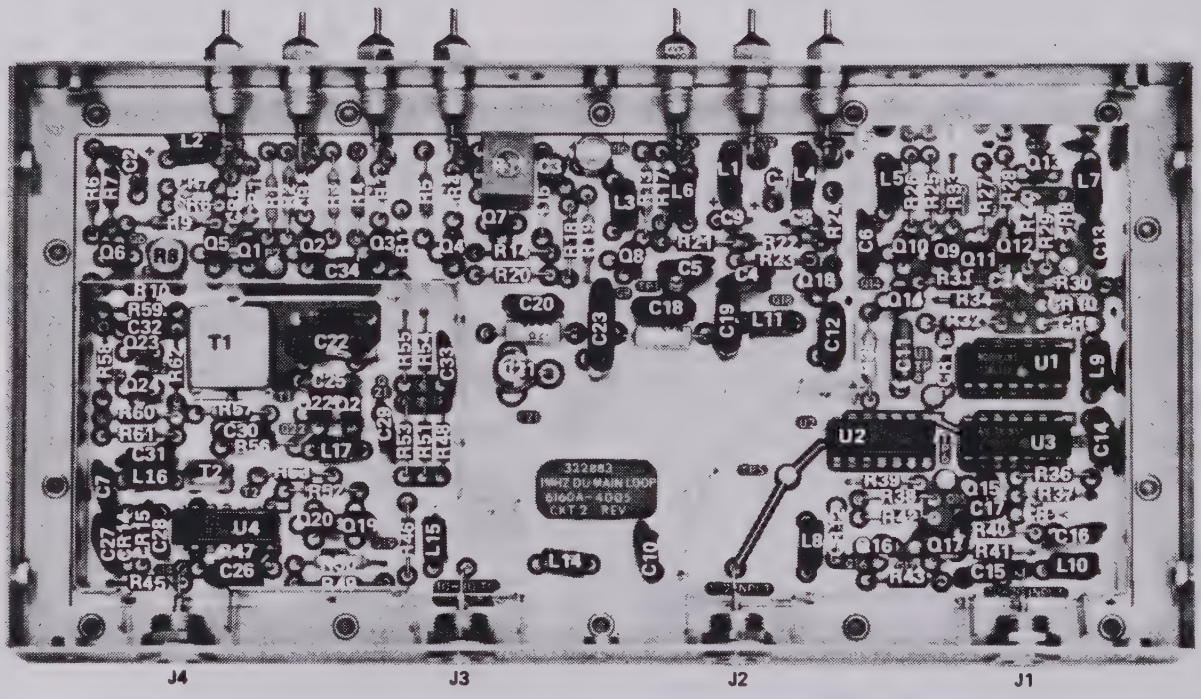

Figure 5-21. 1 MHz MAIN LOOP PCB ASSEMBLY, A10A1

OUTPUT DIVIDER MODULE ASSEMBLY, A11

REF DESIG OR ITEM NO.	DESCRIPTION	FLUKE STOCK NO.	MFG FED SPLY CDE	MFG PART NO. OR TYPE	TOT QTY	REC QTY	USE CDE
A11	OUTPUT DIVIDER MODULE ASSEMBLY 6160A-4111 Figure 5-22	323758	89536	323758	REF		
A11A1	Output Divider PCB Assembly				1		
1	Module cover, inner	323238	89536	323238	1		
2	Module cover, outer	323246	89536	323246	1		
3	Screw, 4 - 40 x ¼ PNH - Phillips	129890	73734	19022	5		
4	Spacer, Hex 4 - 40 x 5/16, Threaded	275503	73734	111410	2		
5	Washer, flat #4	110775	73734	1442	2		
6	Bracket, module mounting	324590	89536	324590	1		
7	Screw, 4 - 40 x 3/8 PNH - Phillips	152124	73734	19024	2		
8	Clamp, cable	100826	95987	¼ - 6B	1		
9	Washer, flat, #4 S.S.	146225	86928	ST10-18-10	1		

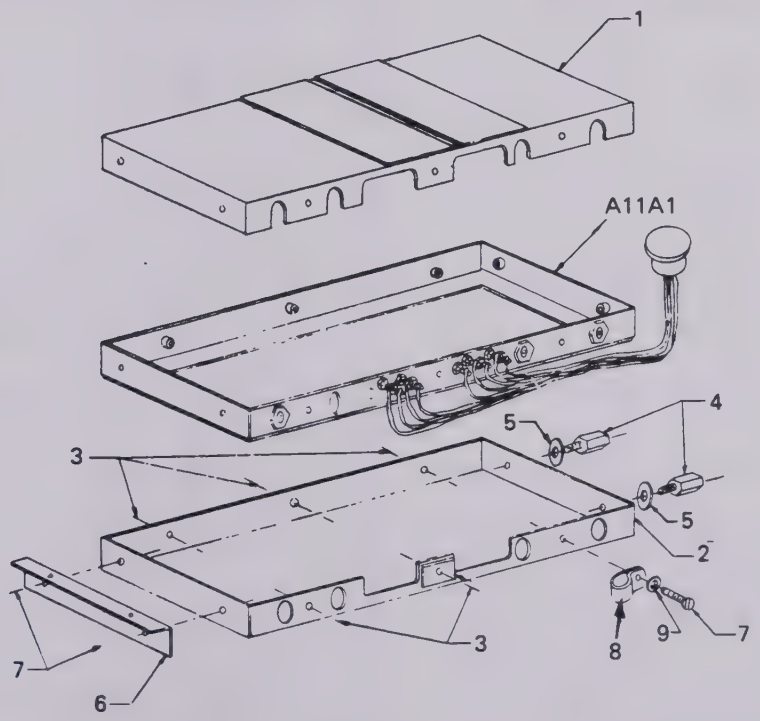

Figure 5-22. OUTPUT DIVIDER MODULE ASSEMBLY, A11

OUTPUT DIVIDER PCB ASSEMBLY, A11A1

REF DESIG OR ITEM NO.	DESCRIPTION	FLUKE STOCK NO.	MFG FED SPLY CDE	MFG PART NO. OR TYPE	TOT QTY	REC QTY	USE CDE
A11A1	**OUTPUT DIVIDER PCB ASSEMBLY** **Figure 5-23 6160A-4011**				REF		
C1							
C1 thru C5, C12, C13, C14, C19, C21, C22, C45, C94, C95, C107, C108, C124	Cap, cer, 0.0012 uf ±10%, 500V	106732	71590	CF122	17		
C10, C84, C85	Cap, Ta, 0.22 uf ±20%, 35V	161331	56289	196D224X0035	3		
C15, C24, C31, C32, C37, C38, C44, C49, C50, C55, C56, C72, C76, C81, C93,	Cap, cer, 0.05 uf ±80/-20%, 25V	148942	72982	5855-Y5U-5032	28		

OUTPUT DIVIDER PCB ASSEMBLY, A11A1

REF DESIG OR ITEM NO.	DESCRIPTION	FLUKE STOCK NO.	MFG FED SPLY CDE	MFG PART NO. OR TYPE	TOT QTY	REC QTY	USE CDE
Cont. C96, C97, C101 thru C106, C116 thru C120	Cap, cer, 0.05 uf ±80/-20%, 25V	148942	72982	5855-Y5U-5032	REF		
C16, C17, C43, C89	Cap, mica, 22 pf ±5%, 500V	148551	53021	D15E220J	4		
C18	Cap, mica, 39 pf ±5%, 500V	148544	53021	D15E390J	1		
C20, C30	Cap, mica, 33 pf ±5%, 500V	160317	53021	D15E330J	2		
C25, C26, C47	Cap, mica, 390 pf ±5%, 500V	148437	53021	D15F391J	3		
C27	Cap, mica, 82 pf ±5%, 500V	148502	53021	D15E820J	1		
C28, C33, C39, C51, C57, C63	Cap, cer, .01 uf, ±20%, 100V	149153	56289	C023B101F 103M	6		
C29	Cap, mica, 56 pf ±5%, 500V	148528	53021	D15F560J	1		
C34, C42	Cap, mica, 180 pf ±5%, 500V	148460	53021	D15F181J	2		
C35, C111	Cap, mica, 47 pf ±5%, 500V	148536	53021	D15E470J	2		
C36	Cap, mica, 130 pf ±5%, 500V	266205	53021	D15F131J	1		
C40, C48	Cap, mica, 360 pf ±5%, 500V	325878	53021	D15F361J	2		
C41	Cap, mica, 110 pf ±1%, 500V	170415	53021	D15F111F	1		
C46	Cap, mica, 510 pf ±5%, 500V	148411	53021	D15E511J	1		

OUTPUT DIVIDER PCB ASSEMBLY, A11A1

REF DESIG OR ITEM NO.	DESCRIPTION	FLUKE STOCK NO.	MFG FED SPLY CDE	MFG PART NO. OR TYPE	TOT QTY	REC QTY	USE CDE
C52	Cap, mica, 1000 pf ±5%, 500V	148387	53021	D19F102J	1		
C53	Cap, mica, 270 pf ±5%. 500V	148452	53021	D15F271J	1		
C54, C109	Cap, mica, 470 pf ±5%,500V	148429	53021	D19F471	2		
C58	Cap, mica, 2000 pf ±5%, 500V	321158	53021	D19F202J	1		
C59	Cap, mica, 560 pf ±5%, 500V	170431	53021	D19F561J	1		
C60	Cap, mica, 820 pf ±5%, 500V	148395	53021	D19F82DJ	1		
C61, C62, C73, C82, C83, C86, C92, C100, C114	Cap, plstc, 0.1 uf ±10%, 250V	161992	73445	C280AE100K	9		
C64	Cap, mica, 3900 pf ±5%, 500V	160325	53021	D19F 392J	1		
C65	Cap, mica, 1075 pf ±1%, 500V	182899	53021	D19F1075F	1		
C66	Cap, mica, 1800 pf ±5%, 500V	148353	53021	D19F182J	1		
C67, C80	Cap, cer, .005 uf ±20%, 50V	175232	56282	C023B101E502M	2		
C68, C69, C71, C75, C78	Cap, Ta, 2.2 uf ±20%, 20V	161927	56289	196D225 X0020	5		
C70 C74, C79	Cap, Ta, 10 uf ±20%, 10V	176214	56289	196D 106 X001	3		
C77	Cap, mica, 18 pf ±5%, 500V	266585	53021	D15C180J	1		
C87	Cap, mica, 2 pf ±0.5, 500V	175208	53021	D15C020D	1		
C88	Cap, var, 1.7 to 010 pf +70/-20%, 250V	321109	73899	DVJ300A	1		
C90, C113	Cap, cer, 6.8 pf ±0.25 pf, 250V	272518	72982	301000C0H 0689C	2		
C91	Cap, mica, 15 pf ±5%, 500V	148569	53021	D15C150J	1		
C110	Cap, mica, 120 pf, ±5%, 500V	148486	53021	D15F121J	1		

OUTPUT DIVIDER PCB ASSEMBLY, A11A1

REF DESIG OR ITEM NO.	DESCRIPTION	FLUKE STOCK NO.	MFG FED SPLY CDE	MFG PART NO. OR TYPE	TOT QTY	REC QTY	USE CDE
C112	Cap, mica, 10 pf, ±5%, 500V	175216	53021	D15C100K	1		
C115	Cap, plstc, 1.0 uf, ±10%, 250V	190330	73445	C280AE/AM	1		
C121	Cap, elect, 10 uf +50/-10%, 25V	170266	73445	C426ARF10	1	1	
C122	Cap, Ta, 39 uf ±20%, 6V	163915	56289	196D396X0006	1		
C123 thru C131	Cap, feed thru	248286	04222	BSF-1BB	9		
CR1 thru CR6	Diode, germanium, 80 mA, 100 piv	149187	93332	1N270	6	2	
CR7, CR13	Diode, pin, silicon	321216	28480	5082-3080	2	1	
CR8, CR9	Diode, silicon, 150 mA	203323	03508	1N4148	2	1	
CR10	Diode, zener, 20 mA	159798	04713	2N 3906	1	1	
CR11, CR12, CR15, CR16	Diode, hot carrier	313247	28480	5082-2811	4	1	
CR14	Diode, silicon, 75V	234450	07910	CD9049	1	1	
CR17, CR19	Diode, silicon, 150 mA	234468	07910	CD9039	2	1	
CR18	Diode, germanium, 50 mA	233197	14433	G1041	1	1	
J1,J2, J4	Conn, male, coaxial	207639	13511	27875	3		
L1,L24	Choke, 0.1 uh ±20%	249110	72259	WEE-0-10	2		
L2,L4	Inductor, 0.12 uh ±20%, 3350 mA	256289	72259	WEE-0.12	2		
L3	Inductor, 0.1 uh ±10%, 3000 mA	257154	24759	MR0.10	1		
L5	Inductor, 0.15 uh ±10%, 2600 mA	256297	24759	MR 0.15	1		
L6,L18, L20, L29	Inductor, 0.12 uh ±10%, 2860 mA	272617	24759	MR-0.12	4		
L7	Inductor, 0.39 uh ±20%, 1420 mA	321026	72259	WEE-.39	1		
L8	Inductor, 0.27 uh ±20%, 2000 mA	321018	72259	WEE.27	1		

OUTPUT DIVIDER PCB ASSEMBLY, A11A1

REF DESIG OR ITEM NO.	DESCRIPTION	FLUKE STOCK NO.	MFG FED SPLY CDE	MFG PART NO. OR TYPE	TOT QTY	REC QTY	USE CDE
L9	Inductor, 0.47 uh ±20%, 1400 mA	248047	72259	WEE-0.47	1		
L10	Inductor, 0.33 uh ±20%, 1900 mA	207605	72259	WEE-0.33	1		
L11	Inductor, 0.82 uh ±10%, 725 mA	320945	24759	MR - 0.82	1		
L12	Inductor, 0.68 uh ±10%, 790 mA	320937	24759	MR - 0.68	1		
L13	Inductor, 1.5 uh ±10%, 1420 mA	321034	72259	WEE -1.5	1		
L14	Inductor, 1.2 uh ±10%, 2200 mA	245498	72259	WEE- 1.2	1		
L15	Inductor, 3.3 uh ±10%, 2030 mA	174714	72259	WEE-3-3	1		
L16	Inductor, 2.2 uh ±10%, 1300 mA	207571	72259	WEE-2.2	1		
L17, L19, L21, L22, L23, L30, L33, L34	Bead, 6 turn	320911	89536	320911	8		
L35	Inductor, 2.7 uh ±10%, 1130 mA	320978	27459	MR-2.7	1		
L36	Bead, ferrite	219535	02114	56-060-85-3B	1		
Q1,Q5, Q7,Q9, Q11, Q13, Q15, Q16, Q19, Q21, Q23, Q33	Xstr, Si, NPN	248351	04713	MPS918	12	4	
Q2, Q24, Q29, Q32	Xstr, Si, NPN	272930	04713	2N5943	4	1	

OUTPUT DIVIDER PCB ASSEMBLY, A11A1

REF DESIG OR ITEM NO.	DESCRIPTION	FLUKE STOCK NO.	MFG FED SPLY CDE	MFG PART NO. OR TYPE	TOT QTY	REC QTY	USE CDE
Q3, Q6, Q8, Q10, Q12, Q14, Q17, Q18, Q20, Q22	Xstr, Si, PNP	226290	04713	MPS3640	10	2	
Q25	Xstr, Si, PNP	229898	04713	MPS6522	1	1	
Q26	Xstr, Si, NPN	218396	04713	2N3904	1	1	
Q27	Xstr, Si, PNP	225599	07263	S22650	1	1	
Q28	Xstr, Si, PNP, dual	242016	11726	QD401-78E	1	1	
Q30, Q31, Q34	Xstr, Si, PNP	215897	04713	2N4126	3	1	
R1 Thru R5 R15, R74, R77, R109	Res, comp, 51Ω ±5%, ¼W	221879	01121	CB5105	9		
R6, R106	Res, comp, 22k ±5%, ¼W	148130	01121	CB2235	2		
R7, R93	Res, comp, 47k ±5%, ¼W	148163	01121	CB4735	2		
R12, R13, R59, R78, R80, R89	Res, comp, 15Ω ±5%, ¼W	147876	01121	CB1505	6		

OUTPUT DIVIDER PCB ASSEMBLY, A11A1

REF DESIG OR ITEM NO.	DESCRIPTION	FLUKE STOCK NO.	MFG FED SPLY CDE	MFG PART NO. OR TYPE	TOT QTY	REC QTY	USE CDE
R14	Res, comp, 390Ω ±5%, ½W	109082	01121	EB3915	1		
R16	Res, met flm, 3.65k ±1%, 1/8W	293779	91637	MFF1-83-653F	1		
R17	Res, met flm, 1k ±1%, 1/8W	168229	91637	MFF1-81001F	1		
R18, R19, R103	Res, comp, 22Ω ±5%, ¼W	147884	01121	CB2205	3		
R20, R83	Res, comp, 6.8k ±5%, ¼W	148098	01121	CB6825	2		
R21, R96	Res, comp, 180Ω ±5%, ¼W	147942	01121	CB1815	2		
R23 thru R28, R30, R31, R32, R54	Res, comp, 5.6Ω ±5%, ¼W	208033	01121	CB5605	10		
R33, R48, R51	Res, comp, 8.2k ±5%, ¼W	160796	01121	CB8225	3		
R34, R36, R38 thru R44, R49, R50, R52, R53, R55, R56, R64, R108	Res, comp, 470Ω ±5%, ¼W	147983	01121	CB4715	17		
R35, R37, R47	Res, comp, 270Ω ±5%, ¼W	160804	01121	CB2715	3		

OUTPUT DIVIDER PCB ASSEMBLY, A11A1

REF DESIG OR ITEM NO.	DESCRIPTION	FLUKE STOCK NO.	MFG FED SPLY CDE	MFG PART NO. OR TYPE	TOT QTY	REC QTY	USE CDE
R57	Res, comp, 68Ω ±5%, ¼W	147918	01121	CB6805	1		
R58, R69, R90, R94, R113	Res, comp, 200Ω ±5%, ¼W	193482	01121	CB2015	5		
R60	Res, comp, 110Ω ±5%, ½W	321166	01121	CB1115	1		
R61	Res, comp, 100Ω ±5%, ¼W	147926	01121	CB1015	1		
R62, R104	Res, comp, 3.9k ±5%, ¼W	148064	01121	CB3925	2		
R63	Res, comp, 390Ω ±5%, ¼W	147975	01121	CB3915	1		
R65, R67, R70, R84, R110	Res, comp, 2.2k ±5%, ¼W	148049	01121	CB2225	5		
R66	Res, comp, 33Ω ±5%, ¼W	175034	01121	CB3305	1		
R68, R79	Res, comp, 1.8k ±5%, ¼W	175042	01121	CB1825	2		
R71	Res, comp, 6.2k ±5%, ¼W	221911	01121	CB6225	1		
R72, R85	Res, comp, 3.3k ±5%, ¼W	148056	01121	CB3325	2		
R73	Res, comp, 100Ω ±5%, ½W	188508	01121	EB1015	1		
R75	Res, comp, 5.1k ±5%, ¼W	193342	01121	CB5125	1		
R76 R91	Res, comp, 24k ±5%, ¼W	193433	01121	CB2435	2		
R82 R98, R105, R107	Res, comp, 330Ω ±5%, ¼W	147967	01121	CB3315	4		
R86	Res, comp, 82Ω ±5%, ½W	108746	01121	EB8205	1		

OUTPUT DIVIDER PCB ASSEMBLY, A11A1

REF DESIG OR ITEM NO.	DESCRIPTION	FLUKE STOCK NO.	MFG FED SPLY CDE	MFG PART NO. OR TYPE	TOT QTY	REC QTY	USE CDE
R87	Res, comp, 27Ω ±5%, ¼W	160812	01121	CB2705	1		
R88, R112	Res, comp, 39Ω ±5%, ¼W	193391	01121	CB3905	2		
R92	Res, comp, 3.3Ω ±5%, ¼W	182279	01121	CB3305	1		
R95	Res, comp, 56Ω ±5%, ¼W	147900	01121	CB5605	1		
R101	Res, comp, 15k ±5%, ¼W	148114	01121	CB1535	1		
R111	Res, comp, 1k ±5%, ¼W	148023	01121	CB1025	1		
T3,T4	Transformer	253278	89536	253278	2		
T5	Transformer	324400	89536	324400	1		
T6,T7	Transformer	324418	89536	324418	2		
T8	Transformer	324426	89536	324426	1		
U1,U2 U9	IC, DTL, Quad 2-input NAND gate	268375	01295	SN15846N	3	1	
U4	IC, ECL, 85 MHz AC coupled J-K flip-flop	320820	04713	MC1032P	1	1	
U5,U6	IC, selected	334771	89536	334771	2		
U7	IC, ECL, dual 3-4 input	320671	04713	MC1026P	1	1	
U8	IC, ECL, D-type, flip-flop	320838	04713	MC1034P	1	1	
U10	IC, selected	334060	89536	334060	1		
XU4, XU5, XU6, XU10	IC, Socket	276535	23880	TSA-2900-16W	4		
1	Harness, Output Divider	332742	89536	332742	1		

OUTPUT DIVIDER PCB ASSEMBLY, A11A1

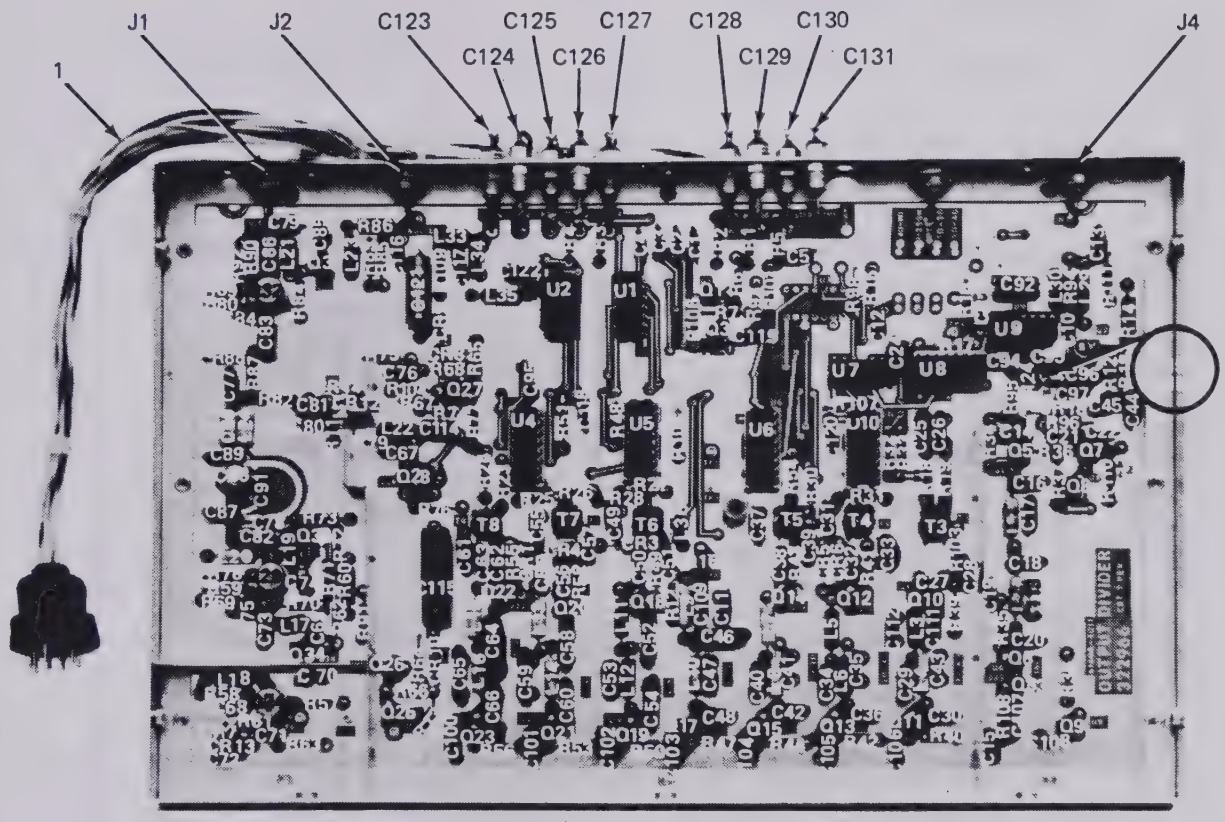

Figure 5-23. OUTPUT DIVIDER PCB ASSEMBLY, A11A1

POWER SUPPLY PCB ASSEMBLY, A12

REF DESIG OR ITEM NO.	DESCRIPTION	FLUKE STOCK NO.	MFG FED SPLY CDE	MFG PART NO. OR TYPE	TOT QTY	REC QTY	USE CDE
A12	**POWER SUPPLY PCB ASSEMBLY** **Figure 5-24 6160A-4014**	322933	89536	322933	REF		
C1, C10, C19	Cap, cer, 0.05 uf +8-/−20%, 25V	148924	72982	5855-Y5U-503Z	3		
C2,C11	Cap, elect, 400 uf +50/−10%, 6.3V	187773	73445	ET471X6P3A6	2	1	
C3,C4, C13, C14, C21, C22	Cap, plstc, 0.1 uf ±10%, 250V	161992	73445	C280AE/A100K	6		
C5,C6, C7, C15, C16, C17, C23, C24, C25	Cap, Ta, 68 uf ±10%, 15V	182824	56289	150D686X901 5R2	9		
C8, C18	Cap, plstc, 2.2 uf, ±10%, 100V	306522	73445	C280MCH/A	2		
C9, C12, C20	Cap, mica, 100 pf, ±5%, 500V	148494	53021	D15F101J	3		
C26	Cap, Ta, 68 uf ±20%, 15V	193615	56289	196D686X00 115LA3	1		
CR1, CR11, CR22	Diode, zener, ±2%, 6.2V	325803	15818	TD333408	3	1	
CR2, CR9, CR12, CR19, CR23, CR29	Diode, zener, ±5%, 6.2V	325811	07910	1N753A	6	2	

POWER SUPPLY PCB ASSEMBLY, A12

REF DESIG OR ITEM NO.	DESCRIPTION	FLUKE STOCK NO.	MFG FED SPLY CDE	MFG PART NO. OR TYPE	TOT QTY	REC QTY	USE CDE
CR3, CR4, CR6, CR7, CR8, CR13, CR14, CR16, CR17, CR18, CR25, CR27	Diode, Si, 150 mA	203323	03508	1N4148	12	3	
CR5	Diode, zener, ±10%, 15V	246033	07910	1N965A	1	1	
CR10	Diode, zener, ±5%, 18V	327973	07910	1N967B	1	1	
CR15	Diode, zener, ±5%, 13V	110726	07910	1N964B	1	1	
CR20	Diode, zener, ±5%, 15V	266601	07910	1N965N	1	1	
CR21	See R38, R39	------	-----	-------	-	-	
CR25	Diode, zener, ±5%, 6V	325795	15818	TD333407	1	1	
CR26	Diode, zener, ±2%, 5.6V	325787	15818	TD333406	1	1	
CR28	Diode, zener, ±2%, 6.8V	325845	04713	5M6.8ZS2	1	1	
F1	Fuse, fast acting, 4 amp	216846	71400	AGC4A250V	1	5	
L1, L2	Inductor, 15 mH	182964	72259	WEE-15,000	2		
Q1,Q2, Q3,Q5, Q9, Q11, Q12, Q13	Xstr, Si, PNP	195974	04713	2N3906	8	2	
Q4,Q6, Q7,Q8, Q10, Q14, Q15	Xstr, Si, NPN	218396	04713	2N3904	7	2	
R1,R6, R22, R27, R43	Res, comp, 1.8k ±5%, ½W	109140	01121	EB1825	5		

POWER SUPPLY PCB ASSEMBLY, A12

REF DESIG OR ITEM NO.	DESCRIPTION	FLUKE STOCK NO.	MFG FED SPLY CDE	MFG PART NO. OR TYPE	TOT QTY	REC QTY	USE CDE
R2, R23, R44	Res, mtl flm, 1.43k ±1%, 1/8W	325662	91637	MFF1-81431F	3		
R3	Res, mtl flm, 261 ±1%, 1/8W	328013	91637	MFF1-82610F	1		
R4, R25	Res, fxd WW, 1 ±1%, 150V, 2W	229534	91637	RS2C70GF	2		
R5, R26, R47	Res, mtl flm, 1.10k ±1%, 1/8W	241497	91637	MFF1-81101F	3		
R7, R28, R49	Res, comp, 130 ±5%, ¼W	325704	01121	CB1315	3		
R8,R29	Res, comp, 3.3k ±5%, ½W	165761	01121	EB3325	2		
R9	Res, comp, 1k ±5%, ½W	108597	01121	DB1025	1		
R10	Res, comp, 4.7k ±5%, ¼W	148072	01121	CB4725	1		
R11, R32, R52	Res, comp, 51 ±5%, ¼W	221879	01121	CB5105	3		
R12, R33	Res, comp, 12k ± 5%, ¼W	159731	01121	CB1235	2		
R13, R34	Res, comp, 100 ±5%, ¼W	147926	01121	CB1015	2		
R14, R35	Res, fxd, WW, 0.15 ±10%, 2W	325712	81483	BWHR15K	2		
R15	Res, mtl flm, 6.49k ±1%, 1/8W	294900	91637	MFF1-86491F	1		
R16, R36, R57	Res, comp, 820 ±5%, ¼W	148015	01121	CB8215	3		
R17, R37, R58	Res, comp, 3 ±5%, ¼W	218040	01121	CB30G5	3		
R18, R19	Res, dual, WW, 11.85K X 14K, 1W (2 on 1)	325183	89536	325183	1		
R20	Res, mtl flm, 100 ±1%, 1/8W	168195	91637	MFF1-81000F	1		
R21	Res, var, CERMET, 100 ±10%, ½W	285130	71450	360S-101A	1		
R24	Res, mtl flm, 237 ±1%, 1/8W	328005	91637	MFF1-82370F	1		

POWER SUPPLY PCB ASSEMBLY, A12

REF DESIG OR ITEM NO.	DESCRIPTION	FLUKE STOCK NO.	MFG FED SPLY CDE	MFG PART NO. OR TYPE	TOT QTY	REC QTY	USE CDE
R30	Res, comp, 1.3k ±5%, ½W	109157	01121	EB1325	1		
R31	Res, comp, 3.9k ±5%, ¼W	148064	01121	CB3925	1		
R38, R39, CR21	Reference Assembly	325266	89536	325266	1		
R40	Res, var, CERMET, 50 ± 10%, ½W	285122	71450	360S-500A	1		
R41	Res, mtl flm, 2.80k ±1%, 1/8W	325670	91637	MFF1-82801F	1		
R42	Res, mtl flm, 866 ±1%, ½W	151233	91637	MFF1-2660	1		
R45	Res, mtl flm, 210 ±1%, 1/8W	327999	91637	MFF1-82100F	1		
R46	Res, WW, 0.27 ±1%, 5W	325696	11502	AS-5	1		
R48	Res, comp, 2.7k ±5%, 1W	296422	01121	GB2725	1		
R50	Res, comp, 510 ±5%, ¼W	218032	01121	CB5115	1		
R51	Res, comp, 1.2k ±5%, ¼W	190371	01121	CB1225	1		
R53	Res, comp, 620 ±5%, ¼W	221903	01121	CB6215	1		
R54	Res, comp, 2 ±5%, ¼W	202879	01121	CB2025	1		
R55, R56	Res, fxd, WW, 0.30 ±5%, 2W	219410	75042	BWHR30J	2		
R59	Res, mtl flm, 4.99k ±.25%, ¼W	267625	91737	MFF1-44991P	1		
R60	Res, mtl flm, 11.8k ±1%, 1/8W	325688	91632	MFF1-81182F	1		
R61	Res, mtl flm, 200 ±1%, 1/8W	245340	91637	MFF1-82000F	1		
U1, U2, U3	IC, operational amplifier	271502	07263	LM301A	3	1	
	Xstr Pad	296319	32559	T0806	4		

POWER SUPPLY PCB ASSEMBLY, A12

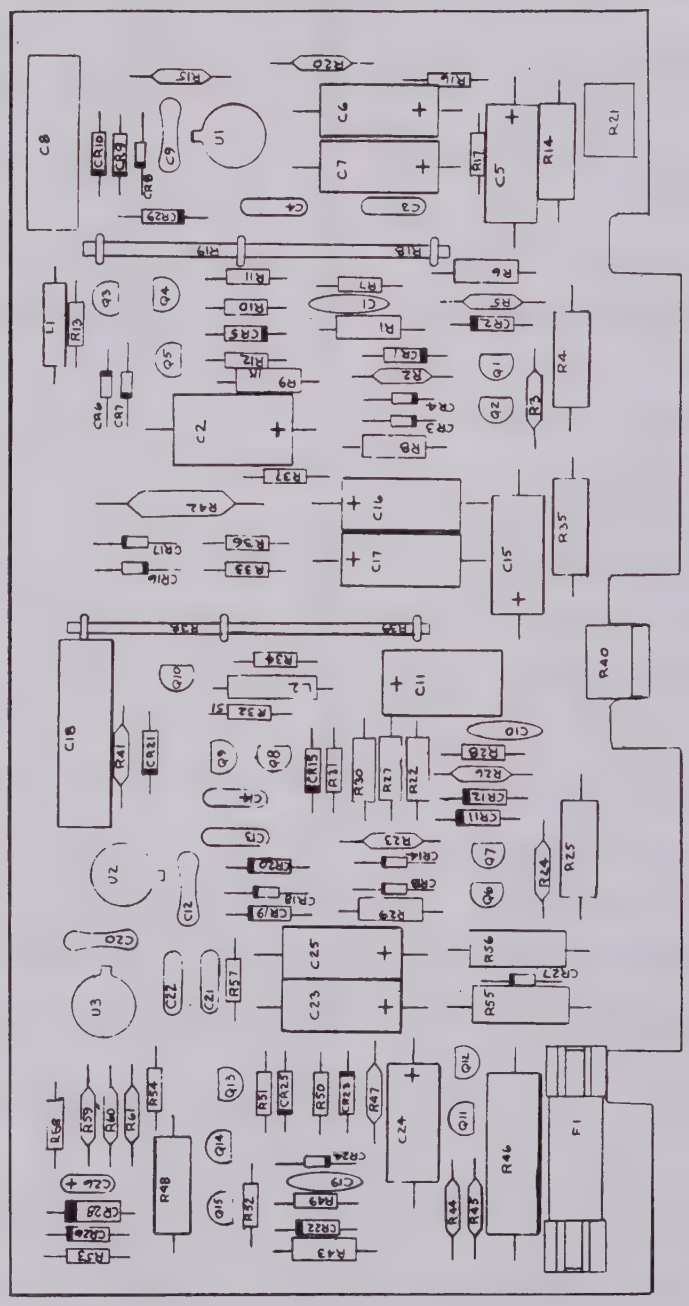

Figure 5-24. POWER SUPPLY PCB ASSEMBLY, A12

RISER PCB ASSEMBLY A13

REF DESIG OR ITEM NO.	DESCRIPTION	FLUKE STOCK NO.	MFG FED SPLY CDE	MFG PART NO. OR TYPE	TOT QTY	REC QTY	USE CDE
A13	**RISER PCB ASSEMBLY** **Figure 5-25 6160A-4015**	323147	89536	323147	REF		
J1, J2	Connector, 20 pin contact	292912	72660	225-21021-110	2		

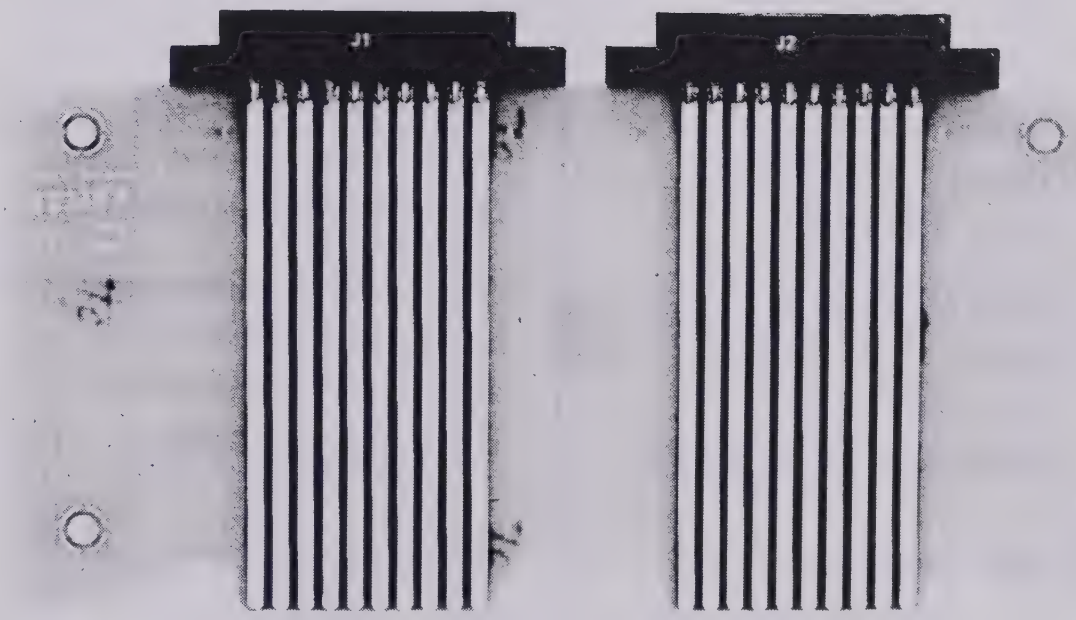

Figure 5-25. RISER PCB ASSEMBLY, A13

RESOLUTION EXTENDER PCB ASSEMBLY, A14

REF DESIG OR ITEM NO.	DESCRIPTION	FLUKE STOCK NO.	MFG FED SPLY CDE	MFG PART NO. OR TYPE	TOT QTY	REC QTY	USE CDE
A14	**RESOLUTION EXTENDER PCB ASSEMBLY –03 OPTION** **Figure 5-26 6160A-4017**	323303	89536	323303	REF		
C1 thru C5,C12, C14, C15, C16	Cap, cer, 0.05 uf +80/–20%, 25V	148924	72982	5855-Y5U-5032	9		
C6	Cap, mica, 2000 pf ±5%, 500V	321158	14655	CD19F202J	1		
C7	Cap, cer, 0.013 uf ±5%, 100V	284893	84411	13351	1		
C8	Cap, plstc, 0.033 uf ±10%, 200V	106062	56289	192P33392	1		
C9	Cap, plstc, .047 uf ±2%, 100V	170449	84171	1PJ473G	1		
C10	Cap, mica, 3600 pf ±2%, 500V	176644	14655	CD19F362G	1		
C11	Cap, plstc, 0.047 uf ±10%, 80V	195099	56289	192P4739R8	1		
C13	Cap, mica, 8 pf ±10%	216986	14655	CD15C080K	1		
C17	Cap, elect, 20 uf +50/–20%, 16V	241356	73445	C426A4E20	1		
C18	Cap, Ta, 68 uf ±10%, 15V	182824	56289	150D686X9015 R2	1		
C19	Cap, Ta, 0.22 uf ±20%, 35V	161331	56289	196D224X0035	1		
C20	Cap, plstc, 0.68 uf ±10%, 100V	182139	84411	JF-30	1		
C22	Cap, Ta, 39 uf ±20%, 20V	163915	56289	196D396X0006	1		
C23	Cap, var, cer, 1.7-10 pf +70/–20%, 250V	321109	73899	DVJ300A	1		
CR1, CR2, CR7, CR8, CR9	Diode, silicon, 150 mA	203323	03508	DHD1105	5		
CR3	Diode, zener, 5.6V, 20 mA	277236	07910	1N752A	1		
CR4, CR6	Diode, hot carrier	313247	28480	5082-2811	2		
CR5	Diode, zener	246611	07910	1N965B	1		
L1	Inductor, sub miniature	320952	24759	MR-1.0	1		
L2	Coil, transformer	191981	89536	191981	1		
L3	Inductor, Choke, 68 mA	321059	72259	WEE-4700	1		

RESOLUTION EXTENDER PCB ASSEMBLY, A14

REF DESIG OR ITEM NO.	DESCRIPTION	FLUKE STOCK NO.	MFG FED SPLY CDE	MFG PART NO. OR TYPE	TOT QTY	REC QTY	USE CDE
L4,L5	Inductor, bead, 6 turn	320911	89536	320911	2		
P1,P2	Connector, male, coaxial	207639	13511	27-875	2		
Q1,Q10	Xstr, Si, PNP	195974	04713	2N3906	2		
Q2,Q3, Q4	Xstr, Si, PNP	226290	04713	MPS3640	3		
Q5,Q6	Xstr, Si, NPN	218396	04713	2N3904	2		
Q7	Xstr, Si, NPN	288324	15818	U1994E	1		
Q8	Xstr, Si, NPN	218081	04713	MPS6520	1		
Q9	Xstr, Si, PNP	229898	04713	MPS6522	1		
R1,R2, R28	Res, comp, 8.2k ±5%, ¼W	160796	01121	CB8225	3		
R3	Res, comp, 2k ±5%, ¼W	202879	01121	CB2025	1		
R4,R31	Res, comp, 5.6k ±5%, ¼W	148080	01121	CB5625	2		
R5,R6	Res, comp, 22 ±5%, ¼W	147884	01121	CB2205	2		
R7, R29, R37	Res, comp, 1k ±5%, ¼W	148023	01121	CB0125	3		
R8,R16	Res, comp, 1.5k ±5%, ¼W	148031	01121	CB1525	2		
R9	Res, comp, 470 ±5%, ¼W	147983	01121	CB4715	1		
R10	Res, comp, 68 ±5%, ¼W	147918	01121	CB6805	1		
R11, R20, R26, R30	Res, comp, 100 ±5%, ¼W	147926	01121	CB1015	5		
R12	Res, comp, 330 ±5%, ¼W	147967	01121	CB3315	1		
R13	Res, comp, 220 ±5%, ¼W	147959	01121	CB2215	1		
R14, R15	Res, comp, 820 ±5%, ¼W	148015	01121	CB8215	2		
R17	Res, comp, 82 ±5%, ¼W	149484	01121	CB8205	1		
R18	Res, comp, 390 ±5%, ¼W	147975	01121	CB3915	1		
R19	Res, comp, 2.7k ±5%, ¼W	170720	01121	CB2725	1		
R22, R36	Res, comp, 3.3k ±5%, ¼W	148056	01121	CB3325	2		

RESOLUTION EXTENDER PCB ASSEMBLY, A14

REF DESIG OR ITEM NO.	DESCRIPTION	FLUKE STOCK NO.	MFG FED SPLY CDE	MFG PART NO. OR TYPE	TOT QTY	REC QTY	USE CDE
R23	Res, met flm, 5.62k ±1%, 1/8W	235168	91637	MFF1-85621F	1		
R24	Res, met flm, 6.8k ±1%, 1/8W	268417	91637	MFF1-8682F	1		
R25	Res, comp, 10k ±5%, ¼W	148106	01121	CB1035	1		
R27	Res, comp, 680k ±5%, ¼W	188433	01121	CB6845	1		
R32	Res, comp, 3.6k ±5%, ¼W	241620	01121	CB3625	1		
R33	Res, comp, 4.3k ±5%, ¼W	193375	01121	CB4325	1		
R34	Res, comp, 2.2k ±5%, ¼W	148049	01121	CB2225	1		
R35	Res, comp, 3.3 ±5%, ¼W	182279	01121	CB3325	1		
R38	Res, var, cer, 1k ±10%, ½Q	275750	71450	360T-102A	1		
U1	IC, DTL, quad 2-input NAND gate	268375	01295	SN15846N	1		
U2	IC, DTL, hex inverter	320853	04713	MC835P	1		
U3	IC, TTL, 50-MHz, decade counter	320754	01295	SN74196N	1		
U4	IC, TTL, 8-input, positive NAND gate	320796	01295	SN74H30N	1		
U5	IC, TTL, quad, 2-input, positive NAND gate	293068	01295	SN74H00N	1		
U6, U12, U13	IC, TTL, 35 MHz, presettable decade and binary counter	320747	01295	SN7416N	3		
U7	IC, TTL, dual, D-type, edge-triggered flip-flops	320804	01295	SN74H74N	1		
U8,U9	IC, TTL, programmable modulo-N-Decade Counter	320705	04713	MC4016P	2		
U10	IC, TTL, phase-frequency detector	320721	04713	MC4044P	2		
U11	IC, TTL, dual voltage controlled multivibrator	320713	04713	MC4024P	1		
U14	IC, TTL, quad, 2-input NAND gate	292953	01295	SN7400N	1		
	Socket, IC, 14 contact, U1 thru 7, U10 thru 14	276527	23880	TSA-2900-14W	12		
	Socket, IC, 16 contact, U8, U9	276535	23880	TSA-2900-16W	2		

RESOLUTION EXTENDER PCB ASSEMBLY, A14

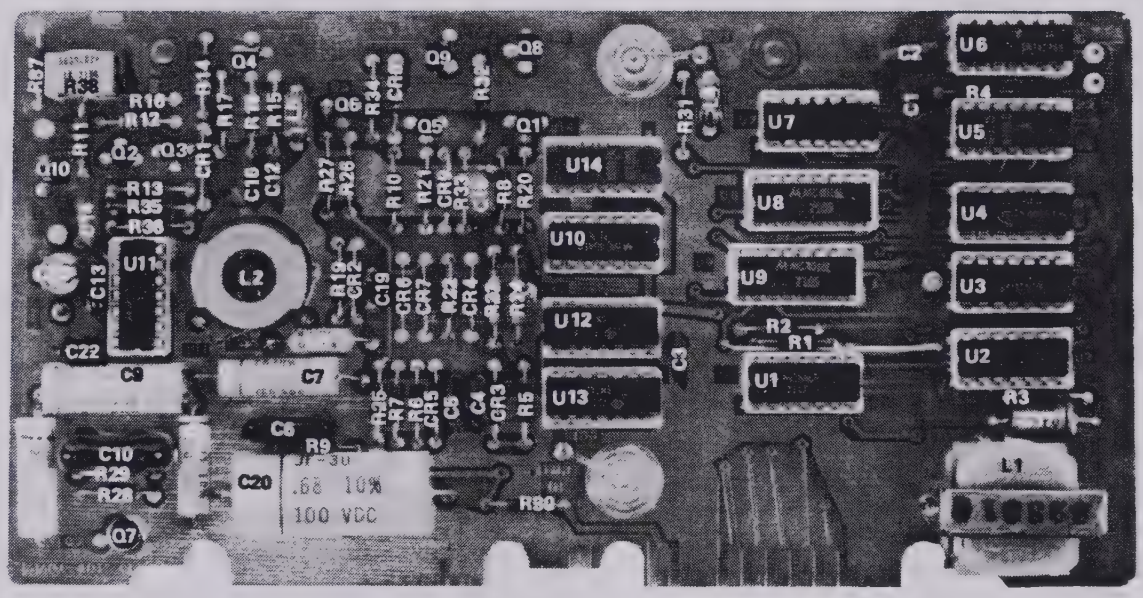

Figure 5-26. RESOLUTION EXTENDER PCB ASSEMBLY, A14

INTERNAL FREQUENCY STANDARD ASSEMBLY, A15

REF DESIG OR ITEM NO.	DESCRIPTION	FLUKE STOCK NO.	MFG FED SPLY CDE	MFG PART NO. OR TYPE	TOT QTY	REC QTY	USE CDE
A15	**INTERNAL FREQUENCY STANDARD ASSEMBLY, –01, –02 OPTION 6160A-4018**						
	–01 Option, 1 x 10^{-8} per day drift rate	315432	89536	315432	REF		
	–02 Option, 2 x 10^{-9} per day drift rate	315440	89536	315440	REF		
	Figure 5-27						
A15A1	5 MHz standard oscillator (–01 Option)	283523	89536	283523	1		
A15A1	5 MHz standard oscillator (–02 Option)	285577	89536	285577	1		
A15A2	Frequency Standard PCB Assembly	324822	89536	324822	1		
	Cable, Coax, Jumper Assembly	172809	89536	172809	1		
	Cable, RF, Assembly	259705	89536	295705	1		
A15A2	**FREQUENCY STANDARD PCB**	324822	89536	324822	REF		
C1,C2	Cap, cer, 0.05 uf +80/–20%, 25V	148924	72982	5855-Y5U-5032	2		
CR1, CR2, CR3	Diode, silicon, 1 amp, 100 piv	116111	05277	1N4817	3		
L1, L2	Bead, 6 turn	320911	89536	320911	2		
Q1	Tstr, silicon, PNP	218537	95305	2N4037	1		
R1	Res, comp, 1k ±5%, ¼W	148023	01121	CB1025	1		
R2	Res, comp, 1.5k ±10%, 1W	109413	01121	GB1521	1		
XY1	Socket, tube	100479	91459	100479	1		
	Cable, RF	259705	89536	259705	1		

INTERNAL FREQUENCY STANDARD PCB ASSEMBLY, A15

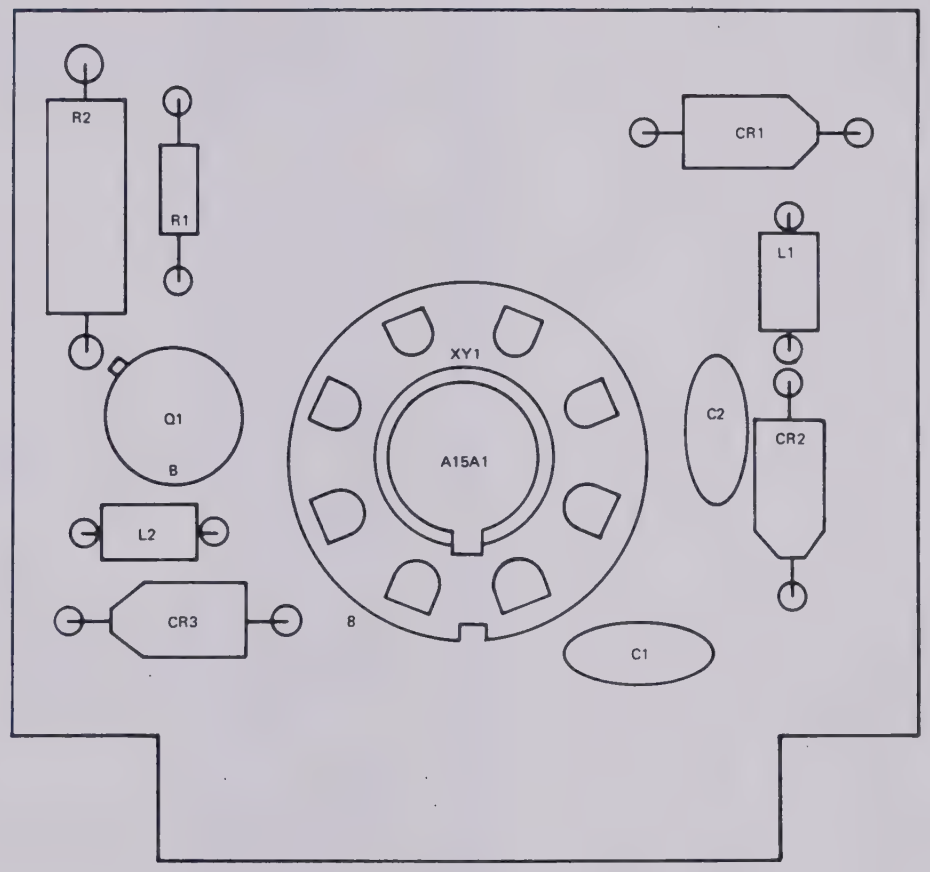

Figure 5-27. INTERNAL FREQUENCY STANDARD ASSEMBLY, A15

1 - 100 kHz DIGITAL UNIT PCB ASSEMBLY, A16

REF DESIG OR ITEM NO.	DESCRIPTION	FLUKE STOCK NO.	MFG FED SPLY CDE	MFG PART NO. OR TYPE	TOT QTY	REC QTY	USE CDE
A16	**1 - 100 kHz DIGITAL UNIT PCB ASSEMBLY** **Figure 5-28 6160A-4002**						
C1,C12 thru C16, C18, C19, C24 thru C29, C40, C42, C43, C44, C48, C49 thru C54 C60 thru C62, C73, C74, C77 thru C81, C85, C86, C87, C90, C91, C105, C107, C111 thru C117, C112, C126, C127, C141, C145, C146, C148, C150, C151, C152,	Cap, cer, 0.05 uf +80/–20%, 25V	148924	72982	5855-Y5U-5032	76		

1 - 100 kHz DIGITAL UNIT PCB ASSEMBLY, A16

REF DESIG OR ITEM NO.	DESCRIPTION	FLUKE STOCK NO.	MFG FED SPLY CDE	MFG PART NO. OR TYPE	TOT QTY	REC QTY	USE CDE
C154, C158, C159, C160, C162, C163, C178, C180, C182, C189 thru C194, C196, C201	Cap, cer, 0.05 uf +80/−20%, 25V	148924	72982	5855-Y5U-5032	76		
C2,C3, C7,C20 C57, C58, C59, C123, C124, C125, C129, C131, C153, C199	Cap, Ta, 0.22 uf ±20%, 35V	161331	56289	196D224X0035	14		
C4	Cap, plstc, 0.0047 uf ±10%, 50V	260844	06001	75F1R5A472	1		
C5	Cap, mica, 1000 pf ±5%, 500V	148387	14655	CD19F102J	1		
C6,C9, C21, C82, C99, C155	Cap, mica, 47 pf ±5%, 500V	148536	14655	CD15E470J	6		
C8,C96	Cap, mica, 1500 pf ±5%, 500V	148361	14655	CD19F152J	2		
C10	Cap, Ta, 68 uf ±20%, 15V	193615	56289	196D686X0015	1		
C11	Cap, var, cer, 4.5 to 50 pf +70/−20%, 250V	321117	73899	DVJ305A	1		
C17, C41, C110, C184	Cap, mica, 330 pf ±5%, 500V	148445	14655	CD15F331J	4		
C22, C83, C156	Cap, Ta, 10 uf ±20%, 15V	193623	56289	196D106X0015	3		

1 - 100 kHz DIGITAL UNIT PCB ASSEMBLY, A16

REF DESIG OR ITEM NO.	DESCRIPTION	FLUKE STOCK NO.	MFG FED SPLY CDE	MFG PART NO. OR TYPE	TOT QTY	REC QTY	USE CDE
C23, C84, C157	Cap, plstc, 0.0047 uf ±20%, 200V	106504	72928	355C472M	3		
C30, C33, C92	Cap, mica, 2200 pf ±5%, 500V	148346	14655	CD19F222J	3		
C31, C93	Cap, mica, 43 pf ±1%, 500V	277202	14655	CD15E430F	2		
C34, C161, C200	Cap, mica, 200 pf ±5%, 500V	272880	14655	CD15F201J	3		
C35	Cap, mica, 220 pf ±5%, 500V	170423	14655	CD15F221F	1		
C36, C68, C100, C132, C168	Cap, mica, 120 pf ±5%, 500V	148486	14655	CD15F121J	5		
C37, C103	Cap, mica, 390 pf ±5%, 500V	148437	14655	CD15F391J	2		
C38, C45, C47, C72, C75, C76, C104, C106, C109, C144, C147, C149, C179, C181, C197	Cap, cer, 0.0012 uf ±10%, 500V	106732	71590	CF-122	15		
C39	Cap, mica, 51 pf ±5%, 500V	277210	14655	CD15E510J	1		

1 - 100 kHz DIGITAL UNIT PCB ASSEMBLY, A16

REF DESIG OR ITEM NO.	DESCRIPTION	FLUKE STOCK NO.	MFG FED SPLY CDE	MFG PART NO. OR TYPE	TOT QTY	REC QTY	USE CDE
C46, C55, C71, C102, C108, C135, C142, C177, C183	Cap, Ta, 2.2 uf ±20%, 20V	161927	56289	196D225X0020	9		
C56, C69, C101, C128, C140, C170	Cap, elect, 20 uf +50/−10%, 16V	241356	73445	C426A4E20	6		
C63, C65, C118, C185	Cap, mica, 62 pf ±5%, 500V	276469	14655	CD15F620J	4		
C64, C130	Cap, plstc, 0.022 uf ±10%, 50V	271577	06001	75F1R5A222	2		
C66	Cap, mica, 160 pf ±5%, 500V	321000	14655	CD15F161J	1		
C67, C98, C119, C136, C172, C176, C187	Cap, mica, 430 pf ±5%, 500V	177980	14655	CD15F431J	7		
C70, C143	Cap, mica, 470 pf ±5%, 500V	148429	14655	CD19F471J	2		
C88, C95	Cap, mica, 270 pf ±5%, 500V	148452	14655	CD15F271J	2		
C94	Cap, mica, 1800 pf ±5%, 500V	148353	14655	CD19F182J	1		
C97	Cap, mica, 68 pf ±5%, 500V	148510	14655	CD15F680J	1		
C120, C186	Cap, mica, 22 pf ±5%, 500V	148551	14655	CD15E220J	2		
C121, C188	Cap, mica, 360 pf ±5%, 500V	325878	14655	CD15F361J	2		
C133	Cap, mica, 33 pf ±5%, 500V	160317	14655	CD15E330J	1		

1 - 100 kHz DIGITAL UNIT PCB ASSEMBLY, A16

REF DESIG OR ITEM NO.	DESCRIPTION	FLUKE STOCK NO.	MFG FED SPLY CDE	MFG PART NO. OR TYPE	TOT QTY	REC QTY	USE CDE
C137	Cap, mica, 110 pf ±1%, 500V	170415	14655	CD15F111F	1		
C138, C169	Cap, mica, 510 pf ±5%, 500V	148411	14655	CD15E511J	2		
C139, C165	Cap, mica, 91 pf ±5%, 500V	277228	14655	CD15E910J	2		
C164	Cap, mica, 560 pf ±5%, 500V	170431	14655	CD19F561J	1		
C166	Cap, mica, 82 pf ±5%, 500V	148502	14655	CD15E820J	1		
C167	Cap, mica, 56 pf ±5%, 500V	148528	14655	CD15F560J	1		
C171, C173	Cap, mica, 1075 pf ±1%, 500V	182899	14655	CD19F10750F	2		
C174	Cap, mica 18 pf ±5%, 500V	266585	14655	CD15C180J	1		
C175	Cap, mica, 620 pf ±5%, 500V	215244	14655	CD19F621J	1		
C195	Cap, mica, 15 pf ±5%, 500V	148569	14655	CD15C150J	1		
CR1 thru CR14, CR16, CR17, CR19 thru CR23, CR33 thru CR46, CR48, CR49, CR53, CR54, CR57, CR62, CR63, CR66, thru CR79, CR81, CR82, CR84, CR87, CR92, CR95, CR97, CR104,	Diode, silicon, 150 mA	203323	03508	DHD1105	67		

1 - 100 kHz DIGITAL UNIT PCB ASSEMBLY, A16

REF DESIG OR ITEM NO.	DESCRIPTION	FLUKE STOCK NO.	MFG FED SPLY CDE	MFG PART NO. OR TYPE	TOT QTY	REC QTY	USE CDE
CR105, CR106	Diode, silicon, 150 mA	203323	03508	DHD1105	67		
CR15, CR47, CR80, CR98, CR99, CR100, CR101, CR102, CR103	Diode, silicon, 150 mA	234468	07910	CD9039	9		
CR18, CR32, CR50, CR51, CR64, CR83, CR86	Diode, Germanium, 50 mA, 100 piv	149187	93332	1N270	7		
CR24, CR25, CR29, CR30, CR55, CR56, CR88, CR89, CR90, CR91	Diode, tuning, hyper abrupt	320200	KEV ELECT	KV2001	10		
CR26, CR27, CR31, CR52, CR58, CR61, CR65, CR85, CR96	Diode, carrier, hot	313247	28400	5082-2811	9		
CR28, CR59	Diode, zener, 20 mA 5.6V	277236	07910	1N752A	2		
CR60, CR94	Diode, zener, 12.5 mA, 10V	246611	07910	1N965B	2		
J1 thru J5	Connector, male, coaxial	207639	13511	27-875	5		

Section 6

Option & Accessory Information

6-1. FREQUENCY STANDARD, OPTION –01

6-2. Introduction

6-3. The –01 Option is a 5 MHz oscillator assembly with a rated stability of 1 part in 10^8 per 24 hours. The oscillator eliminates the need for an external 5 MHz source to drive the synthesizer. The oscillator is ovenized for stability and temperature is maintained as long as ac power is connected to the unit.

6-4. Operation

6-5. Operation of the 6160A with the –01 Option installed is the same as that described in Section 2 for the standard unit, except that no external 5 MHz source need be applied. The 5 MHz oscillator is automatically maintained at operating temperature when the front-panel FUNCTION switch is in the OFF position, as long as ac power is connected.

6-6. Theory of Operation

6-7. Although the oscillator itself is considered non-repairable, the operation of the associated pcb is repairable, and is described in the following text with reference to the A15, Internal Frequency Standard schematic diagram, drawing 6160A-1018. During normal operation, the 5 MHz oscillator operates from the regulated +14-volt and –12-volt supplies. The unregulated +14-volt supply is disconnected by means of Q1, which is cut-off by the front-panel FUNCTION switch.

6-8. When the FUNCTION switch is placed in the OFF position, Q1 conducts to apply the +14-volt unregulated supply to the oscillator oven in order to maintain temperature. Diode CR3 prevents the +14-volt unregulated supply from feeding circuits normally powered by the +14-volt regulated supply.

6-9. List of Replaceable Parts

6-10. The list of replaceable parts for the –01 Option is included in Section 5 of this manual. A component location drawing is included with the parts list.

6-11. FREQUENCY STANDARD, OPTION –02

6-12. The –02 Option is a 5 MHz oscillator assembly which eliminates the need for an external 5 MHz source to drive the 6160A. With the exception of stability characteristics, the function and operation of the –02 Option is identical to that of the –01 Option described earlier in this section. The rated stability of the –02 Option is 2 parts in 10^9 per 24 hours. The list of replaceable parts for the –01 Option is contained in Section 5 of this manual.

6-13. RESOLUTION EXTENDER, OPTION –03

6-14. The –03 Option adds three low-order decades to both the manual and remote frequency selection capabilities of the 6160A. The added decades increase the obtainable resolution on the 1 - 12 MHz range from 100 Hz to 0.1 Hz. On the 10 - 160 MHz range, resolution is increased from 1 kHz to 1 Hz. A detailed description of the operation,

1 - 100 kHz DIGITAL UNIT PCB ASSEMBLY, A16

REF DESIG OR ITEM NO.	DESCRIPTION	FLUKE STOCK NO.	MFG FED SPLY CDE	MFG PART NO. OR TYPE	TOT QTY	REC QTY	USE CDE
L19, L25, L37, L75, L77	Coil, transformer, IF, 30 MHz, tapped, var	339234	89536	339234	5		
L27, L45, L66	Inductor, 150 uh ±5%, 315 mA	174763	72259	WEE-150	3		
L28, L53	Inductor, 270 uh ±5%, 260 mA	186270	72259	WEE-270	2		
L35	Inductor, 1.8 uh ±10%, 1400 mA	320960	24759	MR-1.8	1		
L40, L74	Inductor, 0.39 uh ±10%, 1060 mA	257162	24759	MR-0.39	2		
L52	Inductor, 220 uh ±5%, 280 mA	147835	72259	WEE-220	1		
L57							
L64	Inductor, 2.7 uh ±5%, 1030 mA	320978	24759	MR-2.7	1		
L68, L81 thru L84	Ferrite tube	321182	02114	56-590-65-4B	6		
L70	Inductor, 3.3 uh ±10%, 1040 mA	174714	72259	WEE-3.3	1		
L78	Coil, transformer, 8 turn	321067	89536	321067	1		
Q1,Q3, Q4,Q9, Q10, Q15, Q16, Q17, Q19, Q27, Q28, Q34, Q35, Q40 thru Q43, Q48, Q49, Q57, Q58, Q60, Q61	Xstr, Si, PNP	226290	04713	MPS3640	23		

1 - 100 kHz DIGITAL UNIT PCB ASSEMBLY, A16

REF DESIG OR ITEM NO.	DESCRIPTION	FLUKE STOCK NO.	MFG FED SPLY CDE	MFG PART NO. OR TYPE	TOT QTY	REC QTY	USE CDE
Q2,Q6, Q51	Xstr, Si, NPN	218081	04713	MPS6520	3		
Q5,Q8, Q18, Q29, Q32, Q33, Q50, Q53, Q54	Xstr, Si, PNP	229898	04713	MPS6522	9		
Q7, Q11, Q13, Q26, Q31, Q36, Q38, Q47, Q52, Q56, Q62	Xstr, Si, NPN	248351	04713	MPS918	11		
Q12, Q21, Q25, Q37, Q45, Q46, Q55	Xstr, Si, PNP	195974	04713	2N3906	7		
Q14, Q39, Q59	Xstr, Si, NPN	179374	07263	2N2218	3		
Q20, Q22, Q44, Q63	Xstr, Si, NPN	218396	04713	2N3904	4		
R1	Res, comp, 330k ±5%, ¼W	192948	01121	CB3345	1		
R2,R6	Res, comp, 18k ±5%, ¼W	148122	01121	CB1835	2		
R3	Res, comp, 6.8k ±5%, ¼W	148098	01121	CB6825	1		

1 - 100 kHz DIGITAL UNIT PCB ASSEMBLY, A16

REF DESIG OR ITEM NO.	DESCRIPTION	FLUKE STOCK NO.	MFG FED SPLY CDE	MFG PART NO. OR TYPE	TOT QTY	REC QTY	USE CDE
R4, R49, R53, R86, R90, R140, R144, R178, R182, R232, R237	Res, comp, 1k ±5%, ¼W	148023	01121	CB1025	11		
R5,R19, R25, R110, R111, R193, R194, R202, R227	Res, comp, 5.6k ±5%, ¼W	148080	01121	CB5625	8		
R7, R36, R40	Res, comp, 620 ±5%, ¼W	221903	01121	CB6215	3		
R8, R100, R218	Res, met flm, 4.75k ±1%, 1/8W	260679	91637	MFF1-84751F	3		
R9, R17, R65, R67, R68, R96, R156, R158, R159, R191, R244	Res, comp, 820 ±5%, ¼W	148015	01121	CB8215	11		
R10, R12, R57, R94, R125, R151, R186, R240	Res, comp, 220 ±5%, ¼W	147959	01121	CB2215	8		

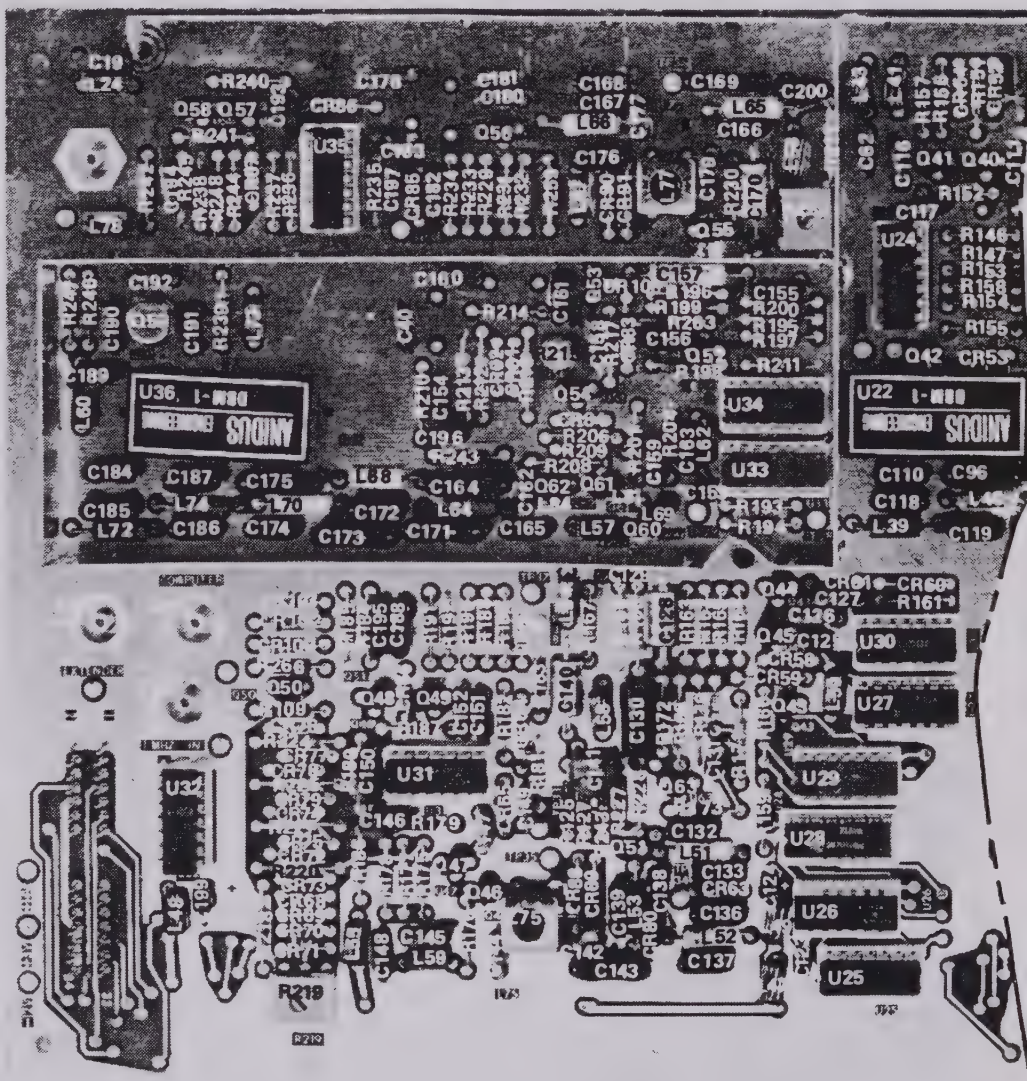

Figure 5-28 (1 of 2). 1 - 100 kHz DIGITAL UNIT PCB ASSEMBLY, A16

1 - 100 kHz DIGITAL UNIT PCB ASSEMBLY, A16

REF DESIG OR ITEM NO.	DESCRIPTION	FLUKE STOCK NO.	MFG FED SPLY CDE	MFG PART NO. OR TYPE	TOT QTY	REC QTY	USE CDE
R18, R66, R157, R192, R245, R258, R260	Res, comp, 1.5k ±5%, ¼W	148031	01121	CB1525	7		
R20, R101, R219	Res, var, cermet, 5k ± 10%, ½W	327569	71450	360T-502A	1		
R21, R72, R102, R170, R220	Res, met flm, 10k ±1%, 1/8W	168260	91637	MFF1-8103F	5		
R22, R103, R221	Res, met flm, 4.99k ±1%, 1/8W	168252	91637	MFF1-84991F	3		
R23, R104, R224	Res, met flm, 2.43k ±1%, 1/8W	312637	91637	MFF1-82431F	3		
R24, R105, R225	Res, met flm, 1.18k ±1%, 1/8W	268409	91637	MFF1-81181F	3		
R26, R228	Res, comp, 2.2k ±5%, ¼W	148049	91637	CB2225	2		
R27, R28, R118, R119, R212, R213	Res, met flm, 5.90k ±1%, 1/8W	267351	91637	MFF1-85901F	5		
R29, R120, R124	Res, comp, 47 ±5%, ¼W	147892	01121	CB4705	3		
R30, R121, R215	Res, var, cermet, 500 ±10%, ½W	226068	80294	3329H-1-501	3		
R31, R122, R216	Res, met flm, 1.43 k ±1%, 1/8W	325662	91637	MFF1-81431F	3		

1 - 100 kHz DIGITAL UNIT PCB ASSEMBLY, A16

REF DESIG OR ITEM NO.	DESCRIPTION	FLUKE STOCK NO.	MFG FED SPLY CDE	MFG PART NO. OR TYPE	TOT QTY	REC QTY	USE CDE
R33, R124	Res, comp, 430 ±5%, ¼W	203869	01121	CB4315	2		
R34, R41, R78, R162, R208	Res, comp, 680 ±5%, ¼W	148007	01121	CB6815	5		
R35, R126, R206	Res, comp, 120 ±5%, ¼W	170712	01121	CB1215	3		
R37, R128	Res, comp, 27 ±5%, ¼W	160812	01121	CB2705	2		
R38, R60, R129, R147, R204, R238	Res, comp, 200 ±5%, ¼W	193482	01121	CB2015	6		
R39, R48, R59, R77, R80, R81, R92, R107, R108, R109, R130, R138, R146, R163, R165, R167, R172, R184, R230, R248	Res, comp, 100 ±5%, ¼W	147926	01121	CB1015	20		

1 - 100 kHz DIGITAL UNIT PCB ASSEMBLY, A16

REF DESIG OR ITEM NO.	DESCRIPTION	FLUKE STOCK NO.	MFG FED SPLY CDE	MFG PART NO. OR TYPE	TOT QTY	REC QTY	USE CDE
R42, R50, R87, R133, R141, R179, R233, R243	Res, comp, 12 ±5%, ¼W	321083	01121	CB1205	8		
R43, R134, R210	Res, comp, 3.3k ±5%, ¼W	148056	01121	CB3325	3		
R44, R135, R222	Res, met film, 604 ±1%, 1/8W	320309	91637	MFF1-86040F	3		
R45, R136, R223	Res, var, 500 ±10%, ½W	325613	71450	360T-501A	3		
R46, R83, R137, R175, R229	Res, comp, 8.2k ±5%, ¼W	160796	01121	CB8225	5		
R47, R85, R139, R177, R201, R231	Res, comp, 470 ±5%, ¼W	147983	01121	CB4715	6		
R51, R88, R142, R180, R234	Res, comp, 1.8k ±5%, ¼W	175042	01121	CB1825	5		
R52, R71, R89, R143, R173, R181, R235	Res, comp, 4.7k ±5%, ¼W	148072	01121	CB4725	7		

1 - 100 kHz DIGITAL UNIT PCB ASSEMBLY, A16

REF DESIG OR ITEM NO.	DESCRIPTION	FLUKE STOCK NO.	MFG FED SPLY CDE	MFG PART NO. OR TYPE	TOT QTY	REC QTY	USE CDE
R55, R116, R149, R199, R247, R255, R148, R239	Res, comp, 510 ±5%, ¼W	218032	01121	CB5115	8		
R56, R150, R246	Res, comp, 15 ±5%, ¼W	147876	01121	CB1505	3		
R70, R115, R160, R161, R198, R252, R254	Res, comp, 22 ±5%, ¼W	147884	01121	CB2205	5		
R73, R171	Res, met film, 3.32k ±1%, 1/8W	312652	91637	MFF1-83321F	2		
R74, R166	Res, met film, 732 ±1%, 1/8W	294884	91637	MFF1-87320F	2		
R75, R169	Res, met film, 6.81k ±1%, 1/8W	268417	91637	MFF1-86811F	2		
R79, R211, R250, R251	Res, comp, 47k ±5%, ¼W	148163	01121	CB4735	4		
R82, R168	Res, met film, 5.62k ±1%, 1/8W	235168	91637	MFF1-85621F	2		
R84, R176	Res, comp, 68 ±5%, ¼W	147918	01121	CB6805	2		
R106, R257, R266	Res, comp, 5.1k ±5%, ¼W	193342	01121	CB5125	3		

1 - 100 kHz DIGITAL UNIT PCB ASSEMBLY, A16

REF DESIG OR ITEM NO.	DESCRIPTION	FLUKE STOCK NO.	MFG FED SPLY CDE	MFG PART NO. OR TYPE	TOT QTY	REC QTY	USE CDE
R112, R113, R195, R197, R205, R207	Res, comp, 91k ±5%, ¼W	148114	01121	CB1535	6		
R114, R196, R253	Res, comp, 91k ±5%, ¼W	193300	01121	CB9135	3		
R117, R203	Res, comp, 3.9k ±5%, ¼W	148064	01121	CB3925	2		
R127	Res, comp, 12k ±5%, ¼W	190371	01121	CB1225	1		
R174, R259	Res, comp, 10 ±5%, ¼W	147868	01121	CB1005	2		
R249	Res, comp, 5.6 ±5%, ¼W	208033	01121	CB5605	1		
R261, R262, R263	Res, comp, 10k ±5%, ¼W	148106	01121	CB1035	3		
U1, U13, U25	IC, DTL, hex inverter	268367	04713	MC836P	3		
U2, U14, U26	IC, TTL, 50 MHz, presettable decade and binary counter	320770	01295	SN74197N	3		
U3, U15, U27	IC, TTL, dual 4-input, positive NAND gate	320788	01295	SN74H20N	3		
U4, U16, U28	IC, TTL, dual, J-K edge triggered flip-flops	293100	01295	SN74H106N	3		
U5, U17, U29	IC, TTL, quad 2-input, positive NAND gate	293068	01295	SN74H00N	3		
U6, U10, U18, U21, U30, U34	IC, TTL, phase frequency detector	320721	04713	MC4044P	6		
U7	IC, TTL, dual voltage-controlled multivibrator	320713	04713	MC4024P	1		

1 - 100kHz DIGITAL UNIT PCB ASSEMBLY, A16

REF DESIG OR ITEM NO.	DESCRIPTION	FLUKE STOCK NO.	MFG FED SPLY CDE	MFG PART NO. OR TYPE	TOT QTY	REC QTY	USE CDE
U8, U24	IC, TTL, 35 MHz; presettable decade and binary counter	320747	01295	SN74176N			
U9, U19, U23, U31, U35	IC, 70 MHz, AC coupled, J-K flip-flop	226340	04713	MC1013P	5		
U11, U20, U32, U33	IC, TTL, quad 2-input, NAND gate	292953	01295	SN7400N	4		
U12, U22, U36	IC, mixer, double balanced	331140	15542	SRA	3		
	Socket, IC, 14 contact	276527	23880	TSA-2900-14W	30		
	Socket, IC, 16 contact, U4, U16, U28	276535	23880	TSA-2900-16W	3		

1 - 100 kHz DIGITAL UNIT PCB ASSEMBLY, A16

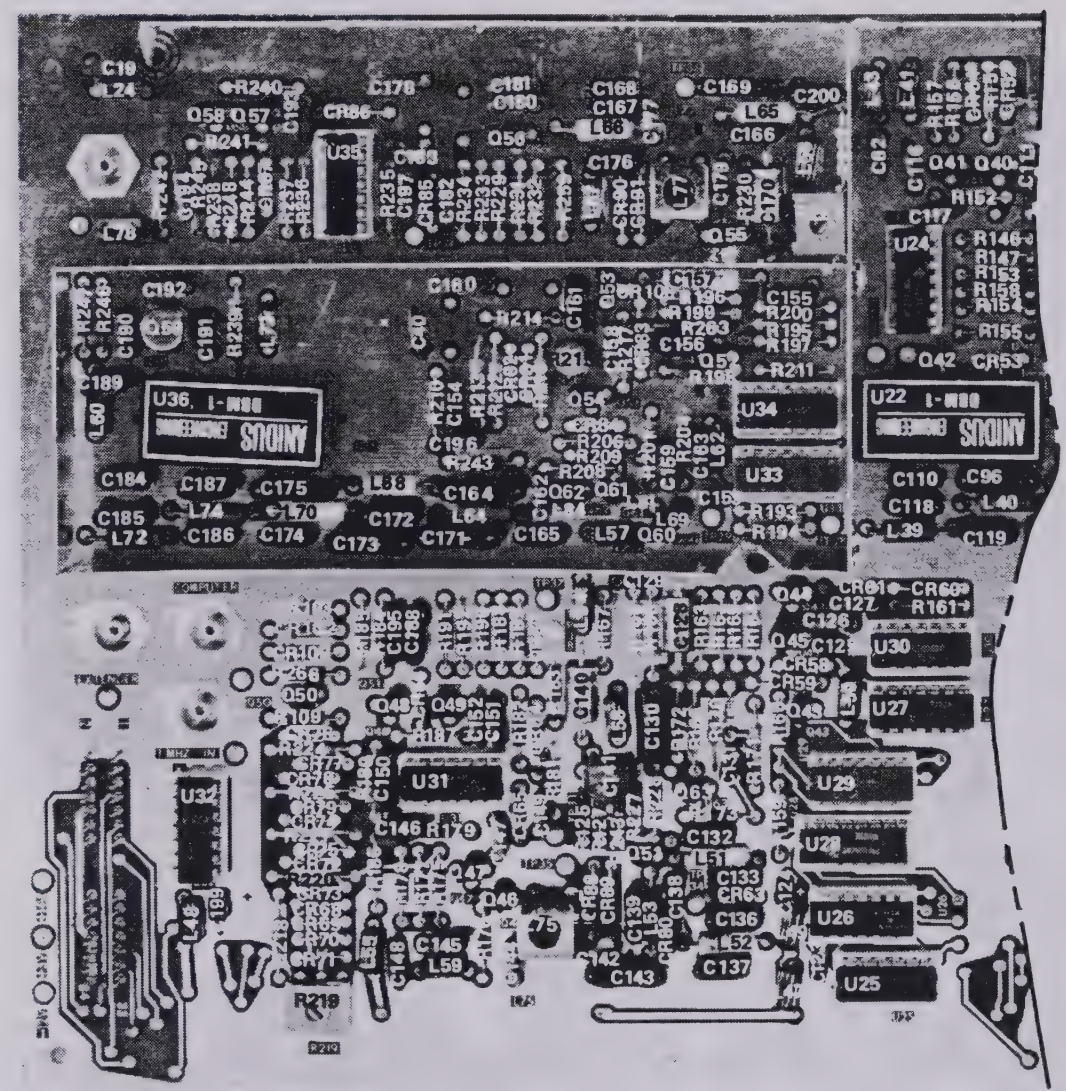

Figure 5-28 (1 of 2). 1 - 100 kHz DIGITAL UNIT PCB ASSEMBLY, A16

1 - 100 kHz DIGITAL UNIT PCB ASSEMBLY, A16

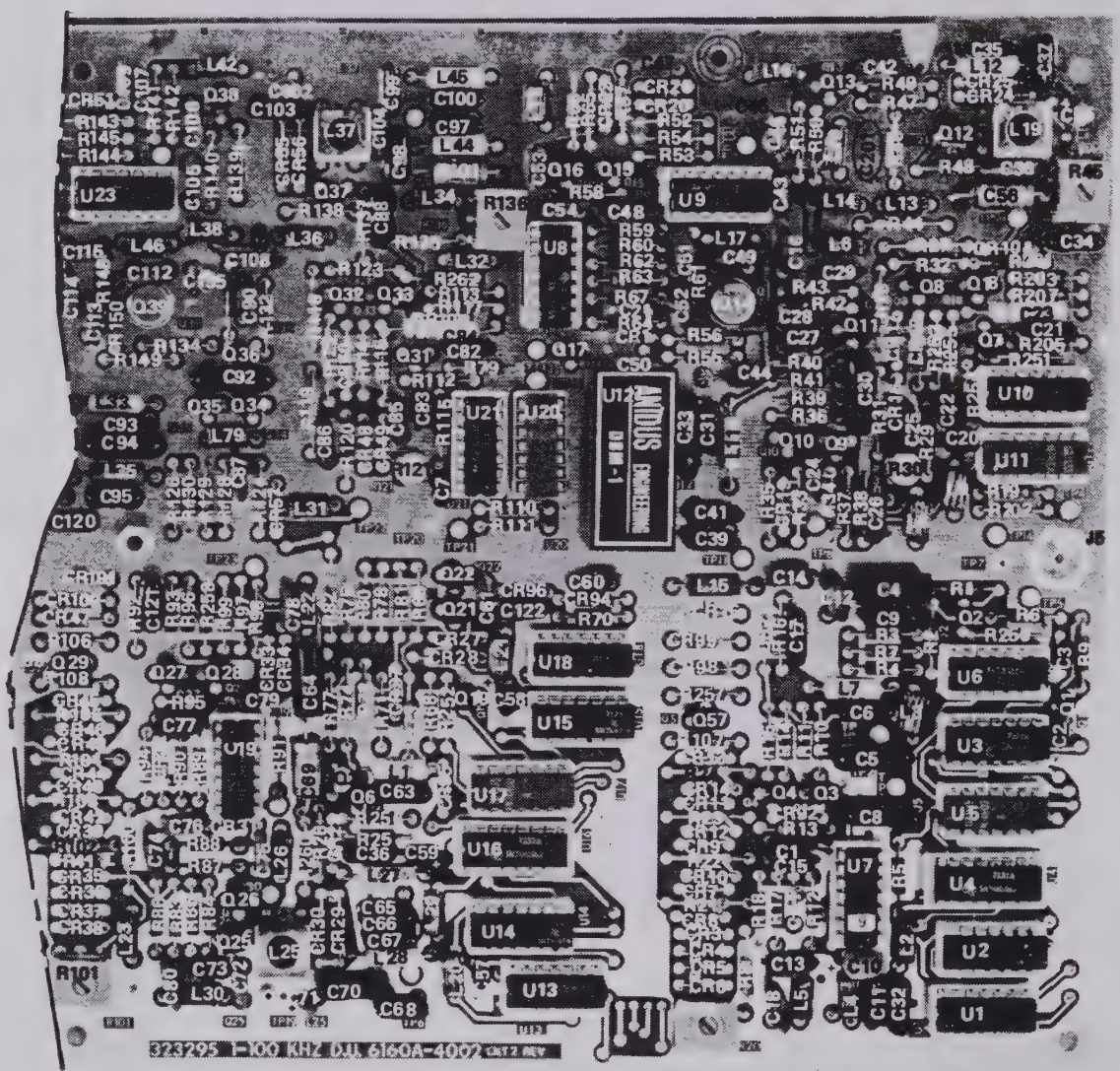

Figure 5-28 (2 of 2). 1 - 100 kHz DIGITAL UNIT PCB ASSEMBLY, A16

COMPUTER PCB ASSEMBLY, A17

REF DESIG OR ITEM NO.	DESCRIPTION	FLUKE STOCK NO.	MFG FED SPLY CDE	MFG PART NO. OR TYPE	TOT QTY	REC QTY	USE CDE
A17	**COMPUTER PCB ASSEMBLY** **Figure 5-29 6160A-4012**	322958	89536	322958	REF		
C1 thru C9,C11 thru C17	Cap, Ta, 2.2 uf, ±20%, 20V	161927	56289	196D225X0020	16		
L1	Choke, 1 mH	323816	89536	323816	1		
R1 thru R32	Res, comp, 6.8k ±10%, 1/8W	246967	01121	BG6821	32		
R34	Res, comp, 100, ¼W	147926	01121	CB1015	1		
U1 thru U6	IC, DTL, hex inverter	320853	04713	MC835P	6	2	
U7,U24, U25	IC, DTL, hex inverter	268367	04713	MC836P	3	1	
U8	IC, DTL, triple 3-input NAND gate	266312	04713	MC862P-6909	1	1	
U9 thru U12	IC, TTL, data-selector/multiplexer	320762	01295	SN74151N	4	1	
U13 thru U16, U32, U33	IC, DTL, quad 2-input NAND gate	268375	04713	MC846P	6	2	
U17, U18, U19, U36	IC, TTL, bcd-to-binary/binary to bcd decoder	320697	04713	MC4001P	5	1	
U20	IC, TTL, 4-bit binary counter	320739	01295	SN7493N	1	1	
U21	IC, TTL, bcd to decimal decoder	283845	01295	SN7402N	1	1	
U22, U28	IC, TTL, MSI, dual 4-bit latch	283837	01295	SN74100	5	1	
U23	IC, TTL, bcd-to-decimal decoder	293142	01295	SN7442N	1	1	
U34	IC, TTL, J-K flip-flop	293035	01295	SN7470N	1	1	
U35	IC, TTL, quad, 2-input NAND gate	292953	01295	SN7400N	1	1	

COMPUTER PCB ASSEMBLY, A17

REF DESIG OR ITEM NO.	DESCRIPTION	FLUKE STOCK NO.	MFG FED SPLY CDE	MFG PART NO. OR TYPE	TOT QTY	REC QTY	USE CDE
1	Bracket hinge	346213	89536	346213	1		
2	Rivet	103424	12014	R3647X5-32	3		
3	Connector body	295337	35037	3402 BODY	2		
4	Connector cover	295329	35037	3402 COVER	2		
5	Connector, post	267500	00779	86144-2	68		
6	Cable, con hex	270116	89536	270116	1		
	Connector, 34 - pin (not illustrated)	325910	35037	3424	2		
	Cable, flat, 34-conductor (not illustrated)	291807	35037	3350	10 in.		
	Cable, flat, 34-conductor (not illustrated)	291807	35037	3350	12 in.		

COMPUTER PCB ASSEMBLY, A17

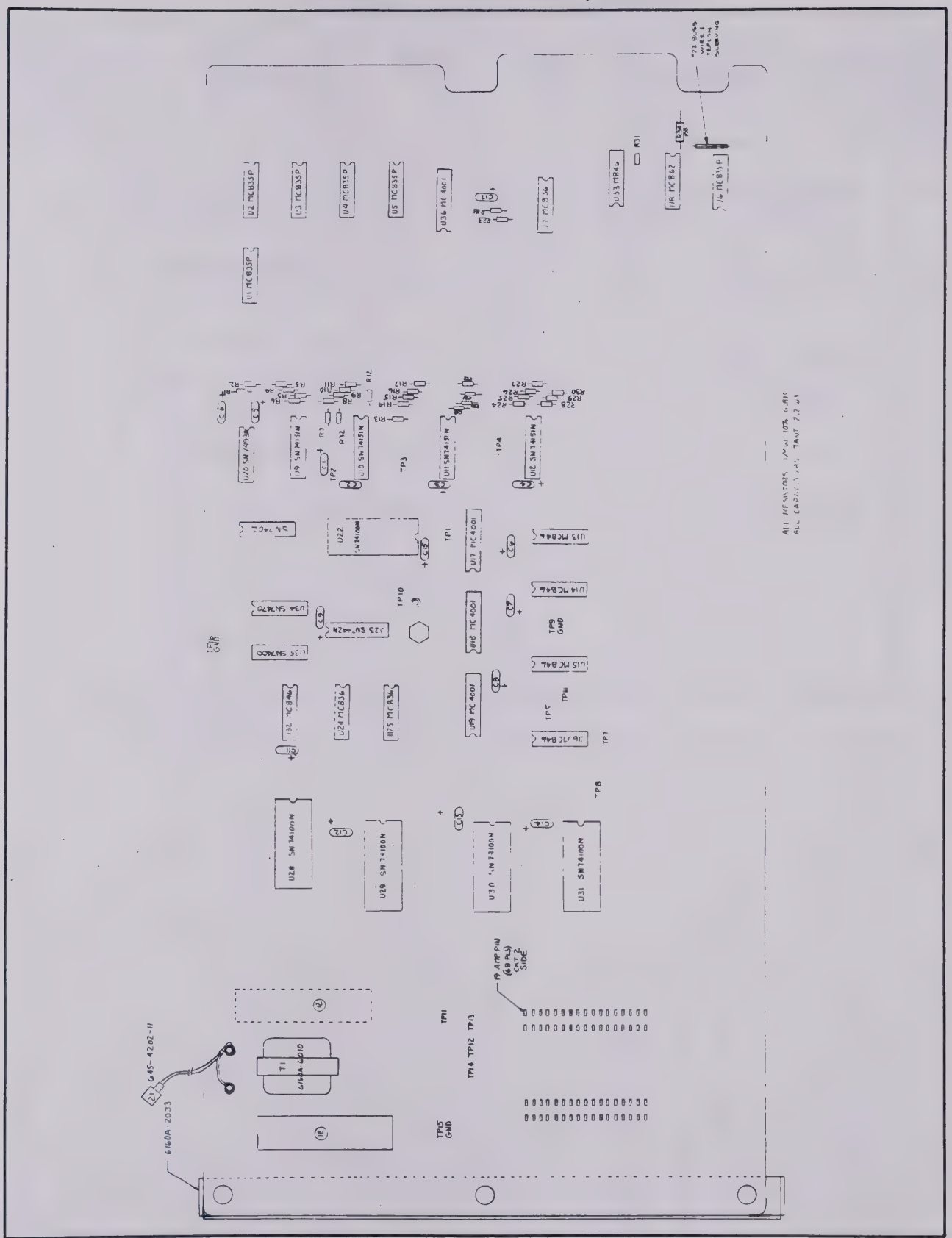

Figure 5-29. COMPUTER PCB ASSEMBLY, A17

MOTHER BOARD PCB ASSEMBLY, A18

REF DESIG OR ITEM NO.	DESCRIPTION	FLUKE STOCK NO.	MFG FED SPLY CDE	MFG PART NO. OR TYPE	TOT QTY	REC QTY	USE CDE
A18	MOTHER BOARD PCB ASSEMBLY Figure 5-30 6160A-4013	356295	89536	356295	REF		
CR1 thru CR4	Diode, Si, 3 amp	187716	04713	MR1032B/ 1N4999	4	1	
CR5, CR6	Diode, Si, rectifier	325746	04713	MR751	2	1	
J8	Terminal Post	267500	00779	86144-2	34		
J10 thru J13	Connector, rcpt. 20 pin	292912	02660	225-21021-110	5		
J15	Socket, tube	100495	95354	PM465	1		

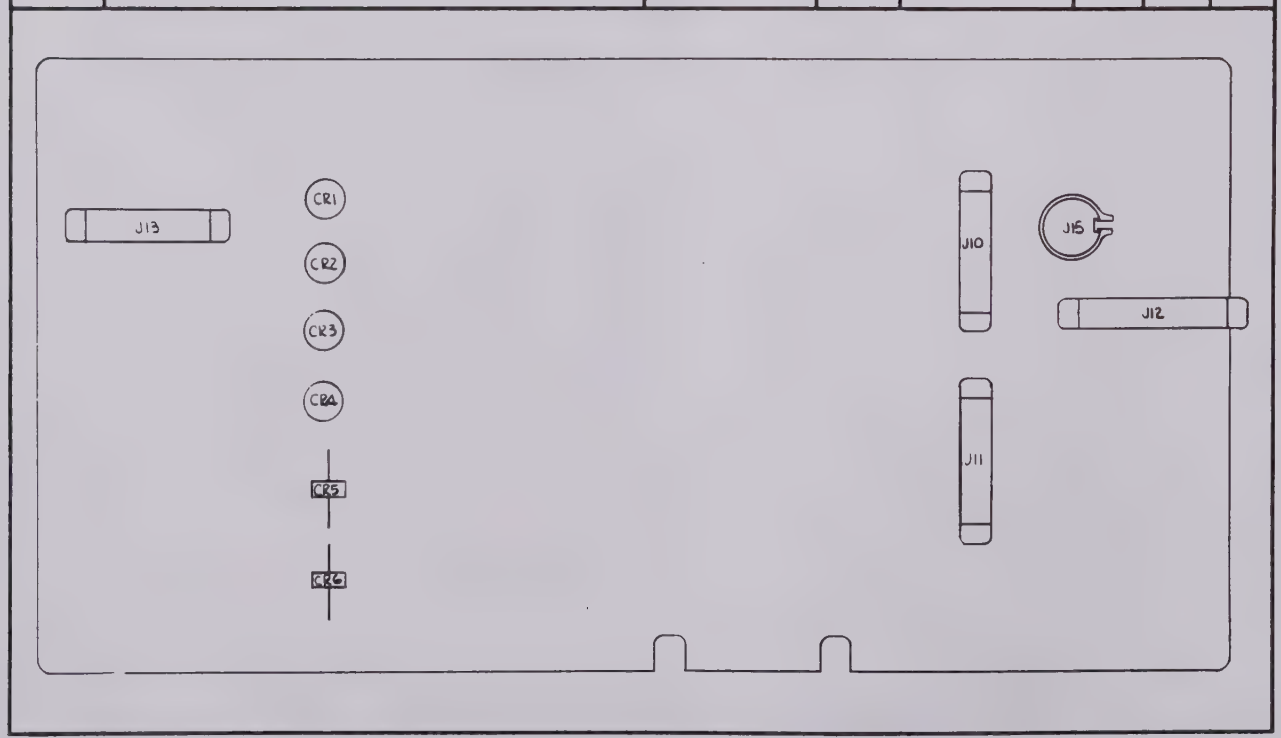

Figure 5-30. MOTHER BOARD PCB ASSEMBLY, A18

REAR PANEL ASSEMBLY, A20

REF DESIG OR ITEM NO.	DESCRIPTION	FLUKE STOCK NO.	MFG FED SPLY CDE	MFG PART NO. OR TYPE	TOT QTY	REC QTY	USE CDE
A20	REAR PANEL ASSEMBLY Figure 5-32 6160A-4452	324616	89536	324616	REF		
1	Rear Panel, screened	323337	89536	323337	1		
2	Washer, flat #8	110288	73734	97425	4		
3	Foot, rear	324897	89536	324897	4		
4	Screw, 8 - 32 x 5/8 PHP	114983	73734	19067	4		
5	Washer, internal lock, #8	110320	73734	99405	4		
6	Hole plug - 5/8"	222711	72653	1713 - C	1		
7	Hole plug - ½"	101774	72653	1712 - C	3		
8	Screw, 6 - 32 x ¼, PNH - Phillips (SEMS)	178533	73734	6-32x1-4PNH SEMS	4		
9	Bracket, card slide	323287	89536	323287	1		
10	Connector, BNC, LEVEL CONTROL INPUT	152033	95712	30355-1	1		
11	Cable Assy, RF #2	259747	89536	259747	1		
12	Cable Assy, RF #1	269969	89536	269969	1		
13	Cable Assy, RF #24	270264	89536	270264	1		
14	Cable Assy, RF #23	333096	89536	333096	1		

REAR PANEL ASSEMBLY, A20

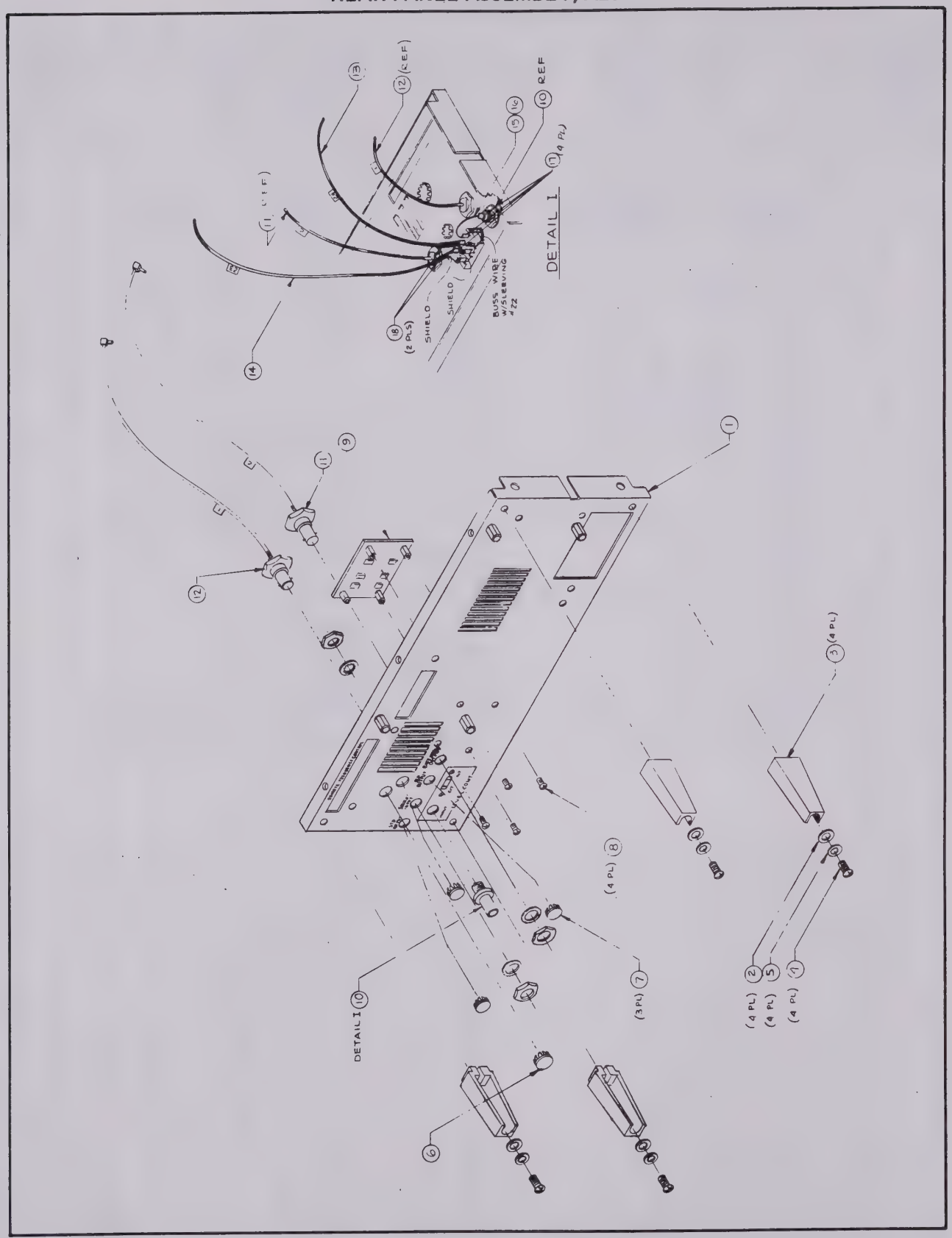

Figure 5-32. REAR PANEL ASSEMBLY, A20

TRANSFORMER ENCLOSURE ASSEMBLY, A19

REF DESIG OR ITEM NO.	DESCRIPTION	FLUKE STOCK NO.	MFG FED SPLY CDE	MFG PART NO. OR TYPE	TOT QTY	REC QTY	USE CDE
A19	**TRANSFORMER ENCLOSURE ASSEMBLY 6160A-4116** **Figure 5-31**	323493	89536	323493	REF		
C1, C2, C3, C4	Cap, cer, 0.005 uf ±20%, 1000V	105650	56289	C023B102H-502M	4		
F1, F2	Fuse, slo-blo, 1.5A	109231	71400	MDS1R5A250V	2	5	
FL1	Filter, line,3A	321273	05245	3EF2	1		
S1	Switch, 115/230V	226274	82389	46256-LFR	1		
T1	Xfmr, power	324434	89536	324434	1		
XF1, XF2	Fuse holder	160846	75915	342004	2		
1	Nut, kep, #8 - 32	195263	78199	51108180000	6		
2	Nut, kep, #6 - 32	195263	78199	51106180000	2		
3	PCB, xfmr connector	323642	89536	323642	1		
4	Screw, 6 - 32 x 3/8, FLH - Phillips	114363	73734	18244	6		
5	Screw, 8 - 32 x 3/8, FLH - Phillips	114116	73734	18264	4		
6	Screw, 8 - 32 x 3/8, PNH - Phillips	114124	73734	19064	4		
7	Screw, 6 - 32 x 3/8, SEMS	177022	73734	6-32 x 3/8 SEMS	4		
8	xfmr enclosure	323345	89536	323345	1		
9	xfmr enclosure, top	323352	89536	323352	1		

TRANSFORMER ENCLOSURE ASSEMBLY, A19

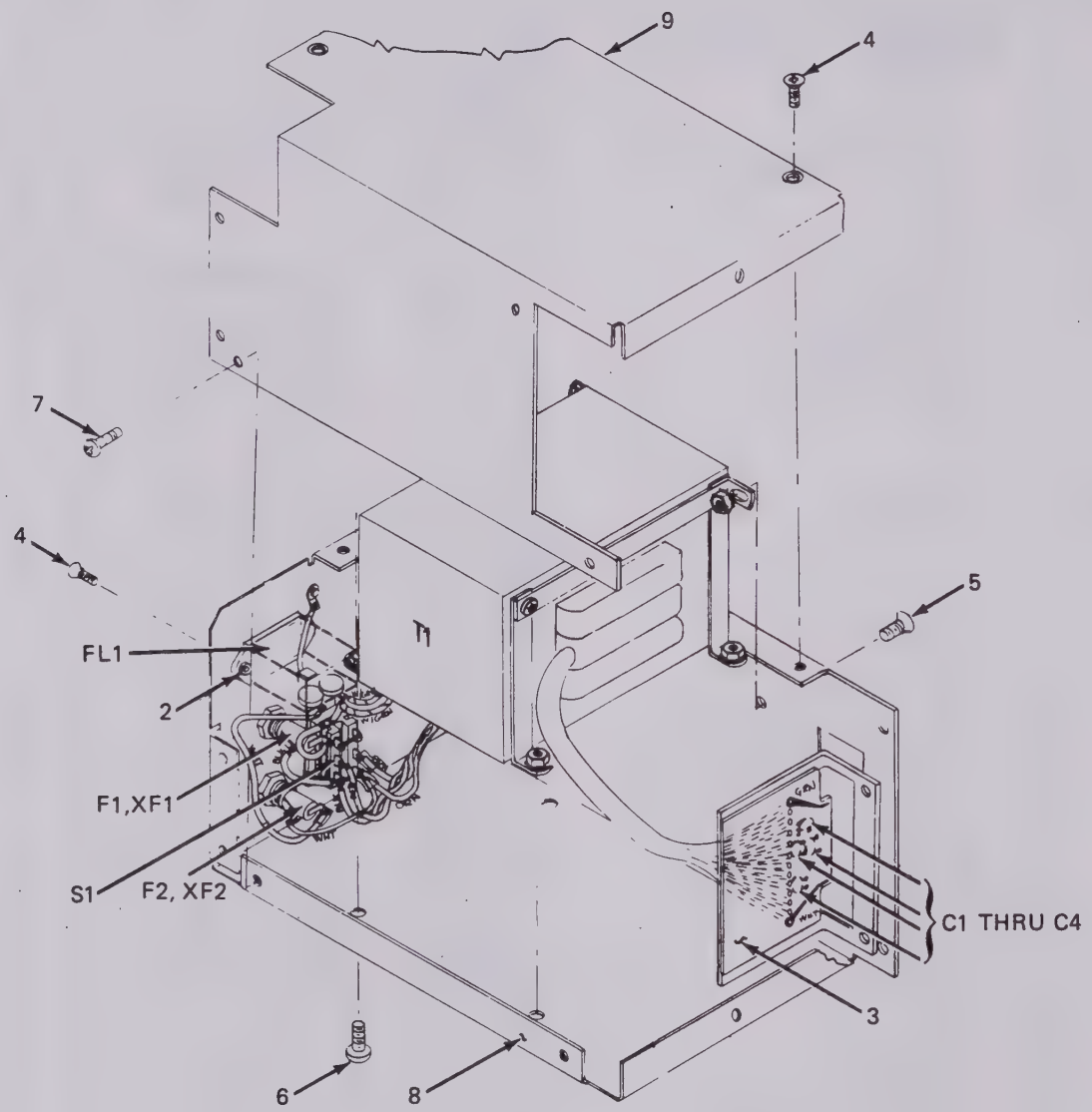

Figure 5-31. TRANSFORMER ENCLOSURE ASSEMBLY, A19

HEAT SINK ASSEMBLY, A21

REF DESIG OR ITEM NO.	DESCRIPTION	FLUKE STOCK NO.	MFG FED SPLY CDE	MFG PART NO. OR TYPE	TOT QTY	REC QTY	USE CDE
A21	**HEAT SINK ASSEMBLY** **Figure 5-33 6160A-4021**	323154	89536	323154	REF		
J1	Connector, board-edge, receptical, 20 pin	292912	02660	225-21021-110	1		
Q1,Q5	Xstr, Si, NPN	325720	04713	MJE3055	2	1	
Q2,Q6	Xstr, Si, NPN	325761	06001	D4465	2	1	
Q3	Xstr, Si, PNP	325738	04713	MJE2955	1	1	
Q4	Xstr, Si, PNP	325753	06001	D4565	1	1	
R1, R2, R3	Res, comp, 620Ω, ±5%, ¼W	221903	01121	CB6215	3		
1	Heat sink	252684	89536	252684	1		
2	Insulator, xstr mounting	331116	13103	4778A	3		
3	Lug, solder, #6	132399	78189	2104-06-00	1		
4	Screw, 4-40 x 1, PNH - Phillips	157008	73734	12030	2		
5	Screw, 6-32 x ¼, PNH - Phillips	152140	73734	19042	1		
6	Screw, nylon with steel core, 6-32 x ¼, RDH - Phillips	272799	23050	6-32x1-4NYL STLRDH	3		
7	Screw, 6-32 x 3/8, PNH - Phillips	152165	73734	19044	3		
8	Standoff, insulator, #6	163592	89536	163592	2		
9	Washer, flat, #4	110775	73734	1442	2		
10	Washer, internal lock, #4	110403	73734	99402	2		
11	Washer, flat, #6	110270	73734	AN960-616L	1		

HEAT SINK ASSEMBLY, A21

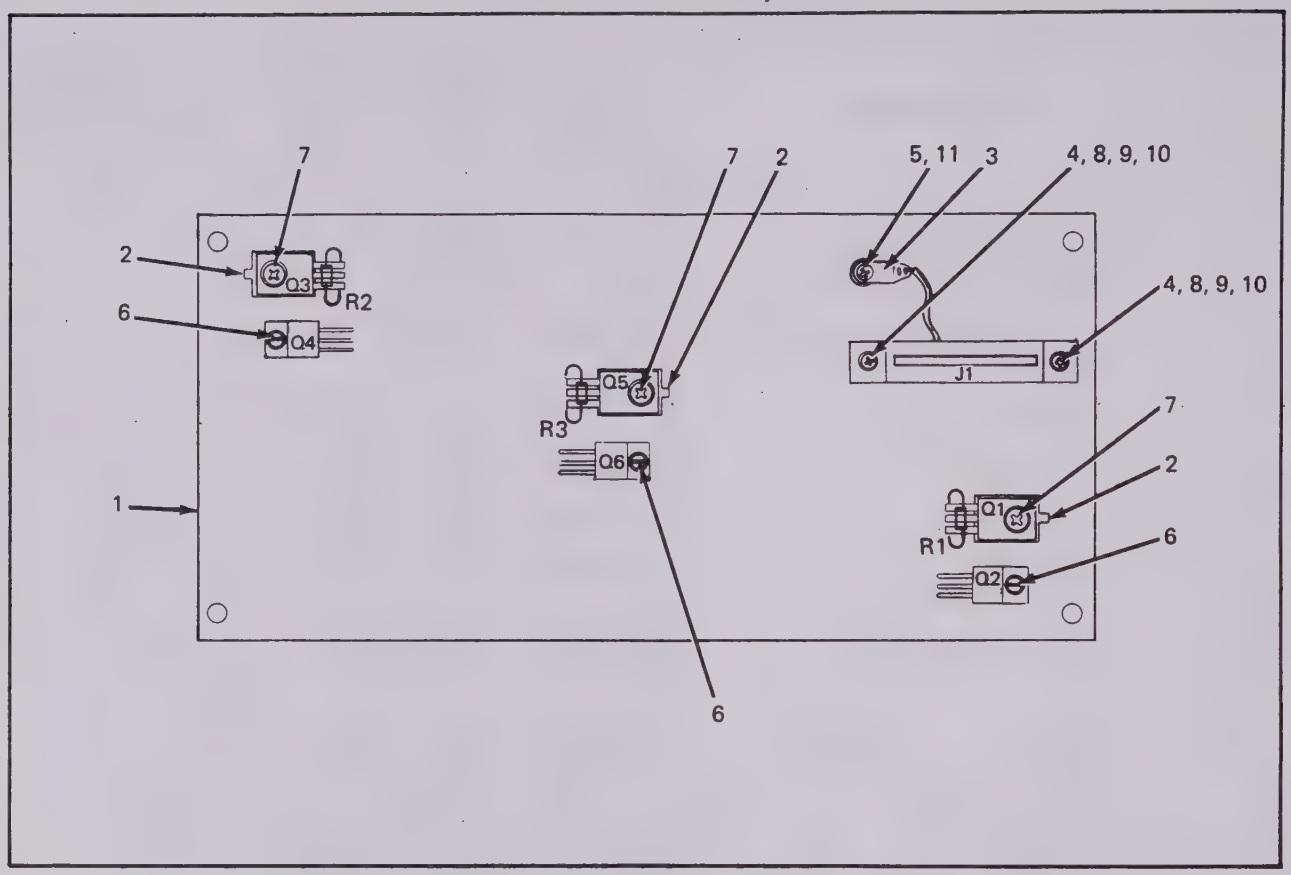

Figure 5-33. HEAT SINK ASSEMBLY, A21

Section 6
Option & Accessory Information

6-1. FREQUENCY STANDARD, OPTION –01

6-2. Introduction

6-3. The –01 Option is a 5 MHz oscillator assembly with a rated stability of 1 part in 10^8 per 24 hours. The oscillator eliminates the need for an external 5 MHz source to drive the synthesizer. The oscillator is ovenized for stability and temperature is maintained as long as ac power is connected to the unit.

6-4. Operation

6-5. Operation of the 6160A with the –01 Option installed is the same as that described in Section 2 for the standard unit, except that no external 5 MHz source need be applied. The 5 MHz oscillator is automatically maintained at operating temperature when the front-panel FUNCTION switch is in the OFF position, as long as ac power is connected.

6-6. Theory of Operation

6-7. Although the oscillator itself is considered non-repairable, the operation of the associated pcb is repairable, and is described in the following text with reference to the A15, Internal Frequency Standard schematic diagram, drawing 6160A-1018. During normal operation, the 5 MHz oscillator operates from the regulated +14-volt and –12-volt supplies. The unregulated +14-volt supply is disconnected by means of Q1, which is cut-off by the front-panel FUNCTION switch.

6-8. When the FUNCTION switch is placed in the OFF position, Q1 conducts to apply the +14-volt unregulated supply to the oscillator oven in order to maintain temperature. Diode CR3 prevents the +14-volt unregulated supply from feeding circuits normally powered by the +14-volt regulated supply.

6-9. List of Replaceable Parts

6-10. The list of replaceable parts for the –01 Option is included in Section 5 of this manual. A component location drawing is included with the parts list.

6-11. FREQUENCY STANDARD, OPTION –02

6-12. The –02 Option is a 5 MHz oscillator assembly which eliminates the need for an external 5 MHz source to drive the 6160A. With the exception of stability characteristics, the function and operation of the –02 Option is identical to that of the –01 Option described earlier in this section. The rated stability of the –02 Option is 2 parts in 10^9 per 24 hours. The list of replaceable parts for the –01 Option is contained in Section 5 of this manual.

6-13. RESOLUTION EXTENDER, OPTION –03

6-14. The –03 Option adds three low-order decades to both the manual and remote frequency selection capabilities of the 6160A. The added decades increase the obtainable resolution on the 1 - 12 MHz range from 100 Hz to 0.1 Hz. On the 10 - 160 MHz range, resolution is increased from 1 kHz to 1 Hz. A detailed description of the operation,

theory, maintenance and list of replaceable parts is integrated into the appropriate sections of this manual. A schematic diagram of the resolution extender is included in Section 8, Schematic Diagrams.

6-15. REAR PANEL RF OUTPUT, OPTION –04

6-16. The –04 option comprises an rf cable and output connector mounted on the rear panel, in place of the standard output connector on the front panel. The rf output characteristics and specifications for the rear panel connector are identical to those specified for the standard front panel rf output connector.

6-17. RACK MOUNTING ACCESSORIES

6-18. The 6160A can be rack mounted using either a Rack Mounting Bracket Kit or a Rack Slide Kit. Both kits are available as accessories and instructions for their installation is included in Section 2 of this manual. The John Fluke part number for each kit is listed below:

Rack Mounting Bracket Kit	M07-205-600
Rack Slide Kit	M00-280-610

FLUKE.

Customer Response Group

Product Change Notice

MODEL: 6160B	PCN: 1789 Rev. 1	CLASS: IV
ASSEMBLY: -4012 Computer PCB	CHANGE NO: 4	DATE: 24 Jun 92
	REFERENCE DCO: 22922, 25145, & 27488	
UNITS AFFECTED: Below S/N 3961000	INSTALLATION TIME: n/a	
	MARK REWORKED ASSEMBLY: n/a	

-Remote Connector Change-

PURPOSE / SYMPTOM:

The mating connector for the rear panel jack (J16) on the Computer PCB has been discontinued by Amphenol Corp. The new mating connectors are supplied to us by Sullins Corp. However, it is shorter in length and the 'stamped' pin-numbering has been slightly altered. The contact jack (J16) on the Computer PCB has been shortened 1/10th inch to accomodate the change in length. Since the Fluke part number of the mating connector has not changed, a modified version has been created to satisfy customers with older units requiring a new replacement connector.

PARTS REQUIRED:

A. For newer 6160B's (S/N 3961000 and above) use:

Mating connector P/N 328104, with connector key P/N 794610*.

B. For 6160B's below S/N 3961000 requiring a mating connector replacement, use:

Modified connector P/N 802272, with same connector key P/N 794610*.

C. To insure a proper alignment using the older mating connectors (Amphenol) with a newer Computer PCB, use connector key P/N 295014.

*NOTE: The removal of contact pins #3 and #4 is required before the 'key' (P/N 794610) can be inserted.

Ray Moddejonge
Sr. Service Engineer

David Whitlock
Group Manager

CHANGE PROCEDURE:

There is a change in the pin-numbering that is stamped onto the connector itself. A cable wire that used to go to pin #1 of the Amphenol connector, would still go to the same *location* on the Sullins connector, however, it will be stamped pin #2.

AMPHENOL

2 ←←← pins →→→ 44

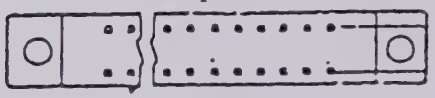

1 ←←← pins →→→ 43

SULLINS

1 ←←← pins →→→ 43

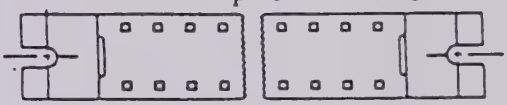

2 ←←← pins →→→ 44

This change in connector/pin-numbering also affects the interfacing ribbon cable for Option 6XXX-522K (IEEE to BCD) used with the Fluke 1120A.

2 ←←←Sullin→→→ 44
1 ←←← Amp →→→ 43

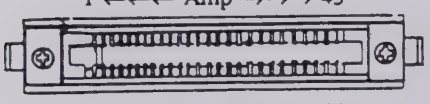

2 ←←← Amp →→→ 44
1 ←←←Sullin→→→ 43

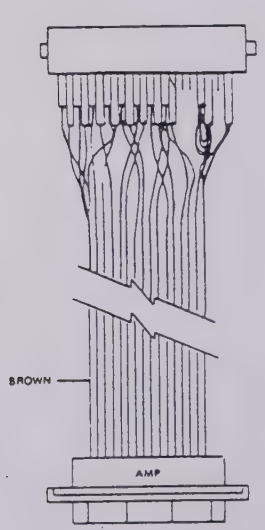

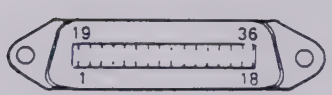

36 PIN CONN P/N 484212	44 PIN EDGE CONN P/N328104 AMP	SULLINS
1	42	41
2	41	42
3	44	43
4	43	44
5	38	37
6	37	38
7	40	39
8	39	40
10	33	34
11	36	35
12	35	36
13	30	29
14	29	30
15	32	31
16	31	32
17	6, 7, 8	5,8,7
18	26	25
19	25	26
20	28	27
21	27	28
22	22	21
23	21	22
24	24	23
25	23	24
26	18	17
27	17	18
28	20	19
29	19	20
30	14	13
31	13	14
32	16	15
33	15	16
34	5	6
35	1	2
36	10	9

THIS DOCUMENT CONTROLS SPECIFICATIONS AND FABRICATION OF A SPECIAL INSTRUMENT MANUFACTURED BY THE JOHN FLUKE MANUFACTURING COMPANY, INCORPORATED.

MODEL

6160A/DB

FLUKE JOHN FLUKE MFG CO., INC.
P.O. BOX 7428, SEATTLE, WN.

SPECIFICATION CONTROL DRAWING
SPECIAL PRODUCTS DIVISION

PROJ. ENG.	DATE 7/20/72	6160A/DB-130
MKTG.	DATE 7/26/73	
ENG. APPD.	DATE 12-3-74	

JF NO. 318311	NO. OF PAGES	REV.

6160A/DB-130

FORM NO. 5044

DOCUMENT CHANGE RECORD

REV. LTR.	PAGE	DESCRIPTION OF CHANGE

100 → 110 MHz

100 kHz

1.0 GENERAL - The 6060A/DB is a special version of the Standard 6160A, built for Microdyne Corp. It covers 40 to 160MHz in 1KHz steps. Frequency selection is by remote control only. Circuit changes have been made in the 1MHz digit section and in the computer board for the purposes of reducing spurious products and reducing the time required for switching frequencies.

2.0 ELECTRICAL SPECIFICATIONS

2.1 Frequency

2.1.1 Range - 40 to 159.999MHz

2.1.2 Increment - 1KHz

2.1.3 Accuracy - 1.6KHz

2.1.4 Stability - 1ppm/Temp/24 hours

2.2 Spurious Outputs

2.2.1 Non-harmonic- -80db within 1MHz of carrier
-85db beyond 1MHz

2.2.2 Harmonic - -25db

2.3 Signal to Noise Ratio

See phase noise spectral density graph, page 9

2.4 Switching Speed

220u sec to be within 5KHz frequency error.

250u sec to be within 2KHz frequency error.

2.5 Output Voltage

1.0V RMS ± 1db (50 ohm load)

2.6 Auxiliary Output

2.6.1 Frequency - 5.0MHz
2.6.2 Voltage - 1.0V RMS ± 1db (50 ohm load)
2.6.3 Spurious - -100db within 100KHz of carrier

2.6.3 (continued)

Spurious - -120db beyond 100KHz

3.0 MECHANICAL SPECIFICATIONS

3.1 Width 19.0 in. (front panel width)

3.2 Depth 20.625 in.(behind front panel)

3.3 Height 7.59 in.

Refer to Midrodyne drawing no. 402-006
Outline Drawing - Fluke Synthesizer

4.0 PARTS LIST

4.1 Purchased Parts - None

4.2 Stock Parts - See Bills of Material under Documentation Index, Section 5.2

4.3 Fab Parts - See Drawings listed under Documentation Index, Section 5.2

5.0 DOCUMENTATION INDEX

5.1 Standard 6160A Operating and Maintenance Manual with 6160A/DB-130 Specification Control Drawing inserted, and the prints specified under MNLS column.

73
91

800-526-4731

Amy coberly

206-356-5849

Bob Leather

5.2 DOCUMENTATION INDEX MODEL: 6160A/DB

ITEM	DRAWING NUMBER	DRAWING TITLE	SHEETS	B/MTL	USAGE MFG	USAGE MNLS			
1	6160A/DB-1005	1MHz Main Loop VCO Schematic				x			
2	-1011	Output Amp Schematic				X			
3	-1012	Computer Schematic				X			
4		←							
5	-2001	Front panel punch			X				
6	-2002	Front panel screen			X				
7	-2013	Rear Panel punch			X				
8	-2014	Bracket, Osc. Mtg.			X				
9	-2015	Center Support Web			X				
10	-2016	Rear Panel Screen			X				
11	-2017	Transformer Enclosure			X				
12	-2020	Chassis Side (RH)			X				
13	-2021	Top Cover			X				
14	-2022	Bottom Cover			X				
15	-2025	Chassis Side (LH)			X				
16	-2050	Corner			X				
17	-2056-1	Name Plate			X				
18	-2056-2	Name Plate			X				
19	-2058	Bracket, Side Mtg.			X				
20	-2059	Bracket, CoverMTg.			X				

JOHN FLUKE MANUFACTURING CO., INC.

Applicable Drawings	6160A/DB-130	REV	PAGE 5

JFFC FORM NO. 1484

5.2 DOCUMENTATION INDEX MODEL 6160A/DB

ITEM	DRAWING NUMBER	DRAWING TITLE	SHEETS	B/MTL	USAGE MFG	MNLS			
1	-2070	Side Plate, Conn.House			X				
2	-2071	Handle Plate,Conn. House			X				
3	-2072	Clip			X				
4	-2701	Chassis Assy.			X				
5	-3012	PCB, Computer			X				
6	-3040	Conn. I.F. PCB			X				
7	-4005	1MHz Main Loop VCO Assy.		X	X				
8	-4011	Output Amp. Assy.		X	X				
9	-4012	Computer Assy.		X	X				REED - 284091 - (2) QTY Coil 272070
10	-4040	Conn. I.F. PCB Assy.		X	X				
11	-4105	1MHz Main Loop VCO		X	X				
12	-4111	Output Amp Module		X	X				
13	-4116	Transformer Assy.		X	X				
14	-4451	Front Panel Assy.		X	X				
15	-4452	Rear Panel Assy.		X	X				
16	-4456	Harness Assy.		X	X				
17	-5001	Final Assy.		X	X				
18	-7001	Accessory Kit		X	X				
19	-7002	Kit, AC Power Cord		X	X				
20	6160A/DB	Test & Button-up		X	X				

JOHN FLUKE MANUFACTURING CO., INC.

Applicable Drawings | 6160A/DB-130 | REV | PAGE 6

JF FORM NO. 1454

5.2 **DOCUMENTATION INDEX** MODEL: 6160A/DB

ITEM	DRAWING NUMBER	DRAWING TITLE	SHEETS	B/MTL	USAGE MFG	USAGE MNLS	USAGE	USAGE	
1	-8012	Standoff, Spacer		X	X				
2									
3									
4									
5									
6									
7									
8									
9									
10									
11									
12									
13									
14									
15									
16									
17									
18									
19									
20									

JOHN FLUKE MANUFACTURING CO., INC.

Applicable Drawings | 6160A/DB-130 | REV | PAGE 7

6.0 APPLICABLE DOCUMENTS

6.1 Basic High Frequency Synthesizer Performance Specification, Microdyne Corp. Dwg. No. 102-100

6.2 General Requirements, Computer Controlled Receiver, Microdyne Corp. , Dwg. No. 102-000

7.0 TEST PROCEDURE

7.1 Factory test per 6160A/DB-150

7.2 Acceptance Test per 6160A/DB-160
To be performed when required per 6160A/DB-160

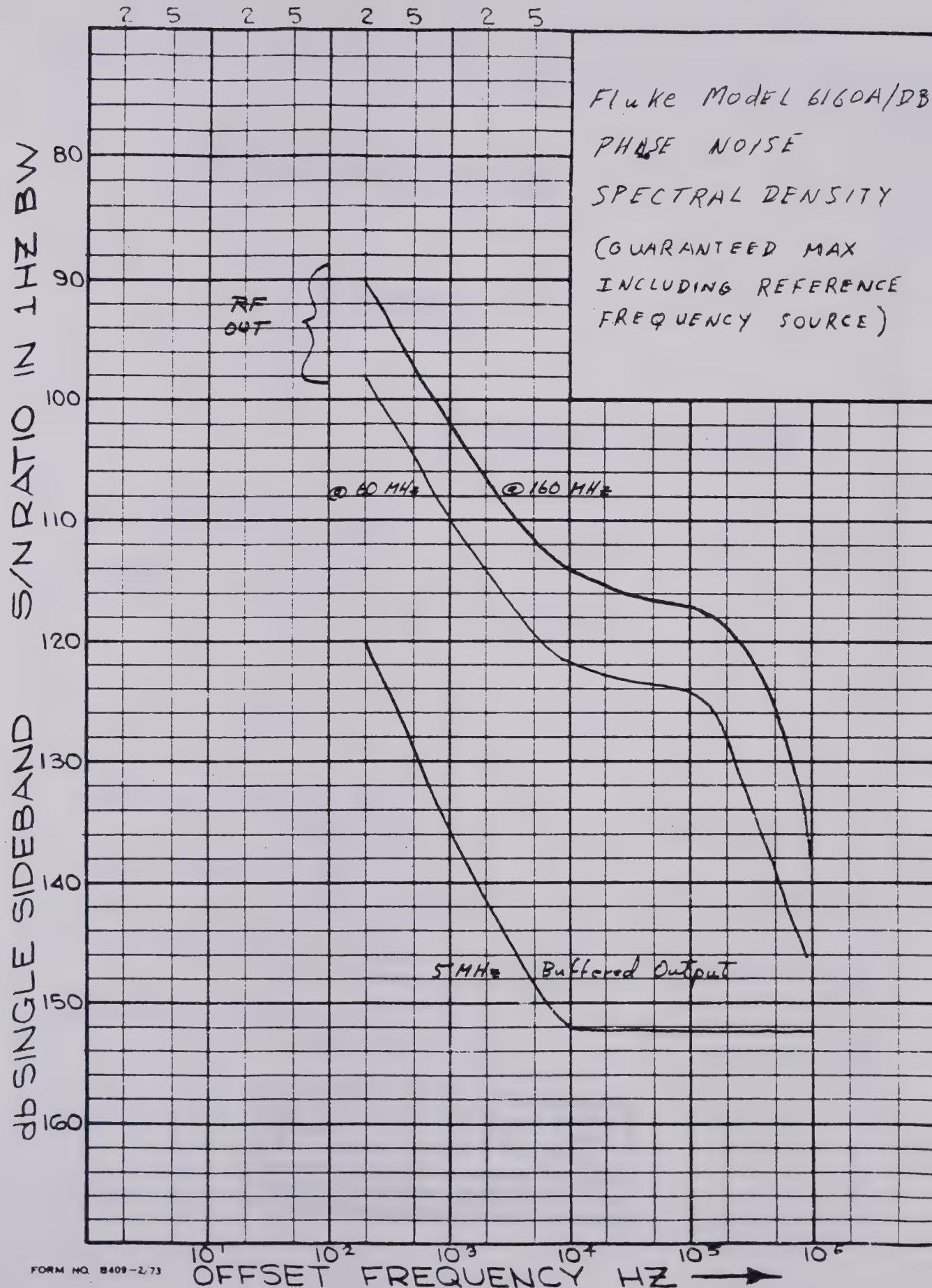
Fluke Model 6160A/DB
PHASE NOISE
SPECTRAL DENSITY
(GUARANTEED MAX
INCLUDING REFERENCE
FREQUENCY SOURCE)
RF OUT
@ 80 MHz
@ 160 MHz
5 MHz Buffered Output
db SINGLE SIDEBAND S/N RATIO IN 1HZ BW
80
90
100
110
120
130
140
150
160
2 5 2 5 2 5 2 5
10^1 10^2 10^3 10^4 10^5 10^6
OFFSET FREQUENCY HZ

PRODUCTION

TEST

PROCEDURE

DOCUMENT NO: 6160A/DB-150

TITLE: Test and Calibration Procedure
6160A/DB Frequency Synthesizer

Unrestricted

No. of pages 20

PREPARED Lanny Pinnell (Project Engineer) DATE 7/16/73

TOOL PROOFED Walter A Riehl (Test Supervisor) DATE 9/12/73

APPROVED _____ (Test Eng.) DATE _____

APPROVED Roy Fried (Engineering Section Head) DATE 9-14-3

APPROVED Tom Smith (Quality Assurance) DATE 9-26-73

FLUKE

Form No. 795

DOCUMENT CLASSIFICATION: Unrestricted

PRIMARY DISTRIBUTION:

Customer Service	1
Quality Assurance	1
Manufacturing Engineering	1
Manufacturing Test	2
Engineering	2
Fluke B. V.	2

SECONDARY DISTRIBUTION:

Name	Title	Date	Dept.	Authorization

DOCUMENT CHANGE RECORD

REV. LTR.	PAGE	DESCRIPTION OF CHANGE
2	10	"MXR OUT" changed to "Analyzer Input" on drawing on page 10 to clarify hookup of phase noise test fixture.

Wayne Means 1/27/74
Wayne Means Date
Test Engineer

John McFay 1-29-74
Walt Riebe Date
Test Department

Lannes Purnell 1/28/74
Lannes Purnell Date
Project Engineer

Tom Smith 1-29-74
Tom Smith Date
Quality Assurance

TABLE OF CONTENTS

Section	Paragraph	Description	Page
		Title Page	
		Distribution List	b
		Document Change Record	c
		Table of Contents	d
		Reference & Test Equipment	1
1.0		Purpose	2
2.0		Scope	2
3.0		Procedure	2
	3.1	Turn-On	2
	3.2	Burn-In	4
	3.3	Post Burn In Tests	4
	3.4	Output Level	4
	3.5	Harmonic Distortion	5
	3.6	Spurious Output Signals	6
	3.7	Wideband Phase Noise Test	10
	3.8	Phase Noise Tests	12
	3.9	Switching Speed Tests	15

REFERENCE AND TEST EQUIPMENT

The following equipment is required for production testing of the 6160A/DB synthesizer.

1) RF voltmeter HP 411 or equivalent
2) Digital Voltmeter JF 8300A-02 or equivalent
3) Frequency counter with 100mV sensitivity and 1-200MHz frequency range
4) 50 BNC resistive load(HP908) and Coaxial Tee (HP11024A)
5) Remote programming fixture FTE 0332
6) Spectrum Analyzer HP 141T display unit with
   8552B IF section
   8553B RF section
   8555A RF section
7) Voltmeter JF 931AB
8) Low Noise Amp FTE No. 0149
9) Blocking Capacitor FTE No. 0155
10) Spurious Test Set FTE 0311
11) Signal Generator HP 8640 or equivalent
12) Oscilloscope
13) Phase noise test set FTE 0239
14) Power Supply FTE 0228
15) Wave Analyzer HP 3590 or equivalent
16) JF 645 Synthesizer
17) Relcom MIB Mixer
18) Co-ax pad 3 dB
19) Low pass filter fc = 10MHz

Calibration Requirements

Each instrument listed above shall be calibrated in its normal factor specified cycle or evidenced by a valid calibration sticker.

1.0 PURPOSE

The purpose of this test procedure is to define requirements and procedures for production testing of Model 6160A/DB Frequency Synthesizer.

2.0 SCOPE

This procedure defines tests to be performed on all production units.

3.0 TEST AND CALIBRATION PROCEDURE

3.1 Turn-On

3.1.1 Preliminary

3.1.1.1 Ensure that line cord is disconnected.

3.1.1.2 Inspect 6 diodes on Mother Board to ensure that they are not shorted to module support.

3.1.1.3 At J11 on the Mother Board, connect the ohm meter as listed below and check for 100 ohm minimum.

High Lead	Low LEAD
Pin C	Chassis
Pin K	Chassis
Chassis	Pin B

3.1.1.4 Terminate RF output with 50 ohms

3.1.1.5 Set R23 on computer board to mid position.

3.1.1.6 Connect remote programming fixture.

3.1.1.7 Set remote programming controls as follows:

Remote on/off - OFF
F_1 - 100.000 MHz
F_2 - Any
Mode - F_1 Only

3.1.1.8 Connect line cord to 115V ac 60Hz source.

3.1.2 Operational Check

3.1.2.1 Switch remote ON/OFF control on remote programming fixture to "ON"

3.1.2.2 Connect DVM between chassis and -12V connector on 4107 module and adjust power supply for -12.000V dc ± 3mV.

3.1.2.3 Connect DVM between chassis and +14V connector on 4107 module and adjust power supply for +14.000V dc ± 3mV.

3.1.2.4 Connect DVM to +5V connector on 4107 module and check for 5.000V dc ± 15mV.

3.1.2.5 Check ripple on all three supplies under normal instrument loading. Spec. 15uV rms as per Figure 1.

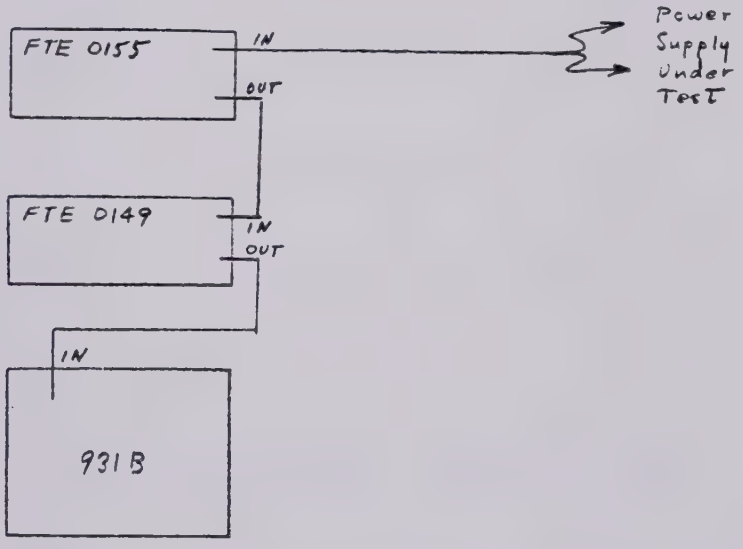

Figure 1 Ripple Measurement

3.1.2.6 Connect counter to RF output for synthesis test at the following settings of the frequency control dials. Use the buffered 5 MHz output of the 6160A/DB as the external time base for the counter.

Dial Settings (MHz)

40.000	50.000	120.000
41.111	56.789	123.456
42.222	66.789	133.456
43.333	76.789	143.456
44.444	79.789	153.456
45.555	80.000	159.999
46.666	90.000	
47.777	100.000	
48.888	110.000	
49.999	119.999	

3.1.2.7 Set the 6160A/DB to 100 MHz and connect the RF Voltmeter (terminated with 50Ω) to the RF output. Adjust R23 (computer board) for a reading of +13 dBm ± 0.25 dBm.

3.2 Burn-In

3.2.1 Install synthesizer in 50° oven under power for a minimum of 4 days.

3.2.2 Check synthesis at dialed frequency once per day.

3.3 Post Burn-In Test

3.3.1 5 MHz Buffer Output

3.3.1.1 Connect RF Voltmeter terminated with 50 ohms to 5 MHz buffered output and check for +13 dBm ± 1 dB.

3.3.1.2 Connect frequency counter and check frequency at 5 MHz ± 1 count on 100 msec time base, at 5 MHz buffered output. Adjust, if necessary, after 30 minutes operation at room temperature.

3.4 Output Level

3.4.1 Disconnect counter and connect RF Voltmeter with 50 ohm termination.

3.4.2 Dial frequencies from 40.000 MHz to 159.999 MHz in 10 MHz steps and observe that the output is +13 dBm ± 0.5 dB adjusting R23 if necessary.

3.5 Harmonic Distortion

3.5.1 Connect "RF Output" on 6160A/DB to HP8555A Spectrum Analyzer.

3.5.2 Set Frequency Dialed to 80 MHz.

3.5.3 Set 8555A Spectrum Analyzer controls as follows:

1. Bandwidth - 300kHz
2. Scanwidth - 100MHz
3. Max Input Level - 100MV
4. Scan Time - 5msec
5. Log Ref Level - 10 dB Log Position
6. Video Filter - OFF
7. Scan Mode - Int.
8. Scan Trigger - Auto

3.5.4 Adjust "Persistence" & "Intensity" controls for display *excessive brightness should be avoided as this could damage the CRT.

3.5.5 Adjust "Log Ref Level" & Linear Sensitivity" controls for a -10 dB ref display of the 80 MHz signal.

3.5.6 Rotate 2 highest digits on remote programming fixture thru their range observing a minimum signal to harmonic ratio of 28 dB.

3.5.7 Disconnect spectrum analyzer from "RF Output" and connect to "5 MHz Output."

3.5.8 Set 855A Spectrum Analyzer controls as in 3.6.3 and 3.6.4.

3.5.9 Adjust "Log Ref Level" & "Linear Sensitivity" controls for a -10 dB reference display of the 5 MHz signal.

3.5.10 Observe a minimum signal to harmonic ratio of 43 dB.

3.6 Spurious Output Signals

3.6.1 Install top cover

3.6.2 Connect the 6160A/DB under test to the spur test set (FTE # 0311) as below.

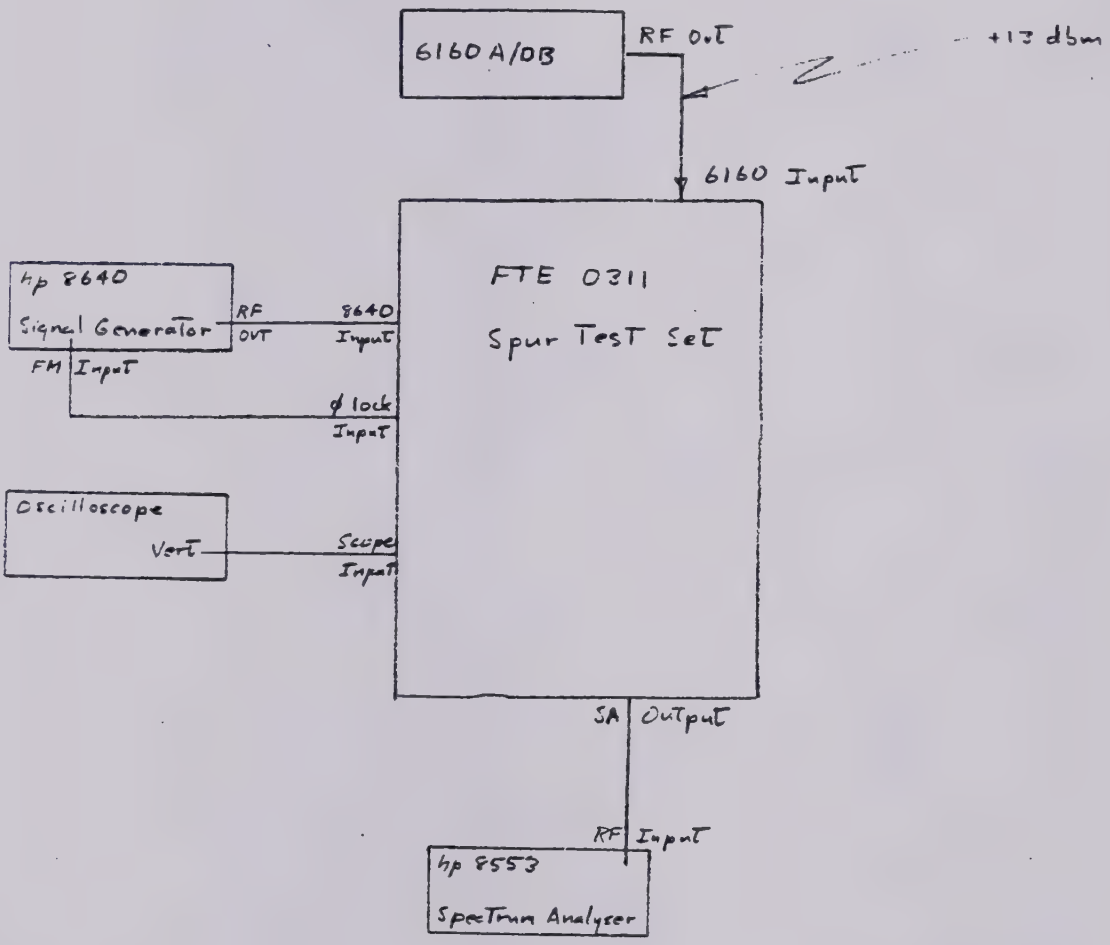

3.6.3 Calibrate spur test set

3.6.3.1 Disconnect phase lock input from signal generator.

3.6.3.2 Set 355D step attenuator to 90 dB.

3.6.3.3 Set signal generator controls as:

Line	ON
Level	volts
AM switch	OFF
FM switch	DC
Peak deviation	160kHz
Peak deviation vernier	fully cw
Counter mode	Int
Time vernier	Cal
RF	ON
Range	As required
Freq tune	As required
Fine tune	As required
Output level	0 dBm

Adjust frequency tune and fine tune for a reading of 100.000 MHz on the counter.

3.6.3.4 Set the 6160A/DB frequency to 100.100 MHz.

3.6.3.5 Set the Spectrum Analyzer controls as:

Range	0-11MHz
Bandwidth	1kHz
Scanwidth/div	20kHz
Input Attenuator	10dB
Video Filter	100 Hz
Scantime/div	0.5 sec
Mode Switch	10dB log
Scan Mode	Int
Scan Trigger	Auto
Log ref level	As required
Display	As required
Frequency	As required
Fine Frequency	As required

Adjust the Frequency and Fine Frequency tuning such that the Spectrum Analyzer zero frequency line is on the left vertical graticule and the 100kHz beat frequency line is on the center vertical graticule.

Adjust the log ref level controls such that the 100kHz beat frequency line level is at -46 dB.

The spur test set is now calibrated such that the -40 dB reference line on the Spectrum Analyzer will indicate a -80 dB spurious signal level.

3.6.3.6 Set the HP355D step attenuator to 10dB and connect the phase lock input to the signal generator.

3.6.4 Spur Test

3.6.4.1 For all of the frequencies listed, dial the signal generator and the 6160A/DB under test to the indicated frequency and note phase lock by an approximate 0 VDC level and no beat frequency as appears on the oscilloscope.

3.6.4.2 Examine all of the frequencies below for spurious signals. On the data sheet, note the offset and level of any spurious signals less than -85 dB down (45 dB ref line on the Spectrum Analyzer).

Dial Frequency (MHz)	Dial Frequency (MHz)
80.010	80.801
.791	.802
.792	.803
.793	.806
.794	.810
.795	.811
.796	.813
.797	.814
80.799	80.821

Dial Frequency (MHz)	Dial Frequency (MHz)
80.822	108.038
.903	.039
.933	.112
.964	.113
.973	.137
80.993	.199
81.798	.210
.842	.211
.992	.212
.995	.229
81.998	.270
87.010	.409
.503	.419
.504	.431
.505	.516
87.511	.666
88.131	.761
.132	.799
.135	.830
88.137	.874
89.201	.899
.202	.912
.203	108.989
.207	110.797
.208	111.105
.209	113.752
.210	115.491
.211	115.510
.212	116.663
.213	120.802
.284	121.999
89.745	127.482
90.703	133.333
.706	140.802
90.707	141.855
95.982	141.997
97.772	144.247
.773	144.597
.774	146.482
.777	146.882
.778	150.020
97.779	150.802
99.203	152.597
100.792	157.607
106.510	.752
.511	157.753
106.512	158.863

3.6.4.3 After completing the list above, if any spurs are are less than 85 dB down, recalibrate the test set-up at the frequency and offset of interest and recheck the questionable spur. Repeat for all questionable spurs.

3.7 Wideband Phase Noise

3.7.1 Connect the phase noise test set (FTE-0239) as shown below.

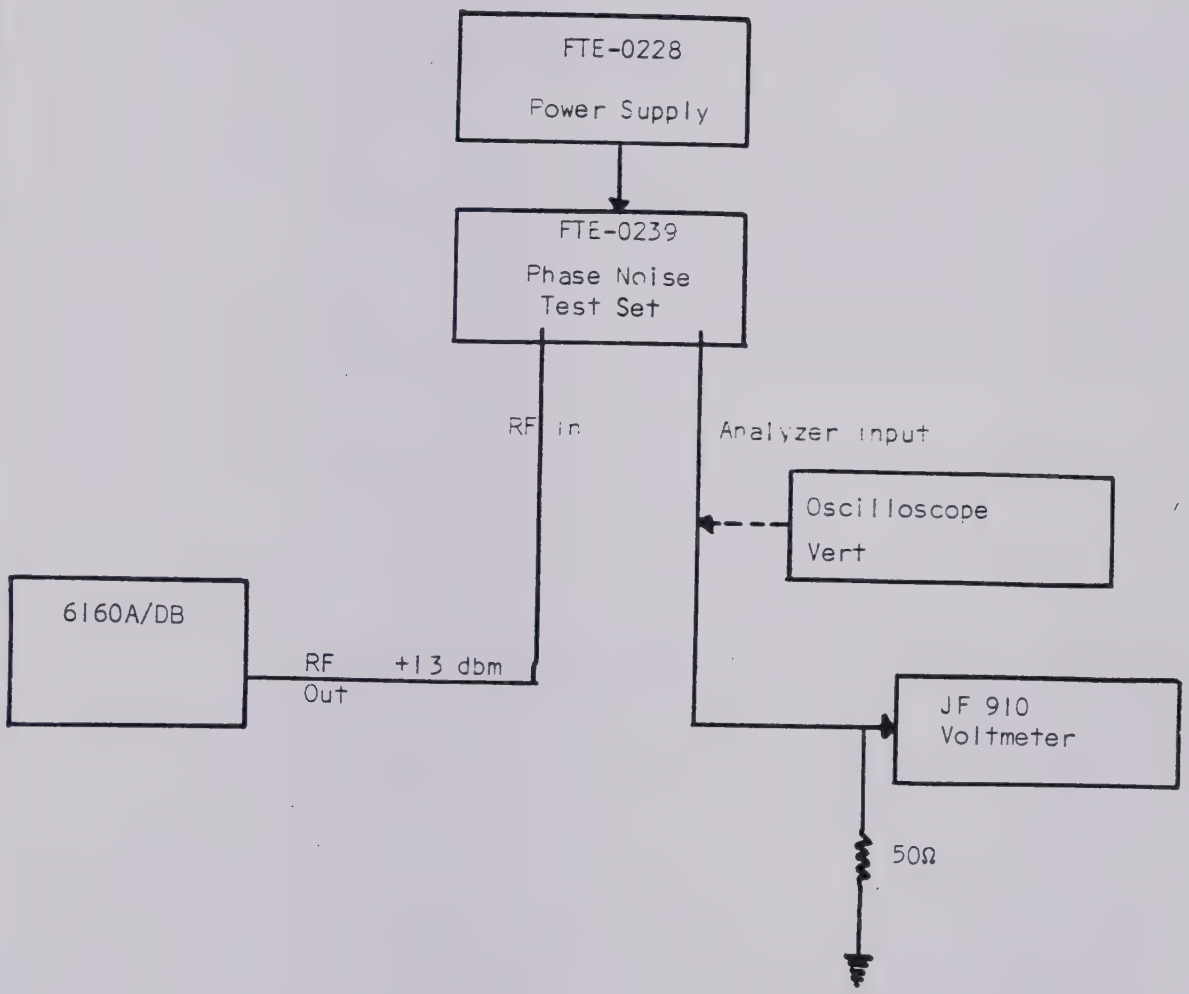

3.7.2 Set the Phase Noise Test Set controls to "160 MHz" and "Calibrate."

3.7.3 Set the synthesizer frequency to 159.999 MHz.

3.7.4 Take note of the reference reading on the voltmeter. This reading corresponds to a -60 dB single side band spurious signal at 1 kHz offset from the carrier or equivalent noise level. Calibration is established by precision pads internal to the Phase Noise Test Set.

3.7.5 Set the synthesizer output frequency to 160.000 MHz by dialing 159.998 + 2. (+2 denotes an over-ranging digit giving a binary coded 10 command.)

3.7.6 Set the Phase Noise Test Set controls to "Operate." Adjust the trimmer on the synthesizer's Frequency Standard until the phase meter indicates that it is coming within phase locking range of the test set oscillator. An oscilloscope DC coupled to the mixer output of the test set is useful as an aid in tuning the oscillator. Adjust the phase shift control to center the phase meter after lock is attained.

3.7.7 Observe meter reading and compute (Spurious plus Noise) to carrier ratio using the following relationship:

Ratio = (Meter Reading - Reference Reading - 60 dB)

For example: If reference reading is -35 dB and measurement reading is -42 dB, the spurious plus noise to carrier ratio is (-42 + 35 - 60) = -67 dB.

3.7.8 Record computed ratio. The ratio should be 55 dB minimum.

3.8 Phase Noise

3.8.1 Connect the phase noise test set FTE 0239 as shown below:

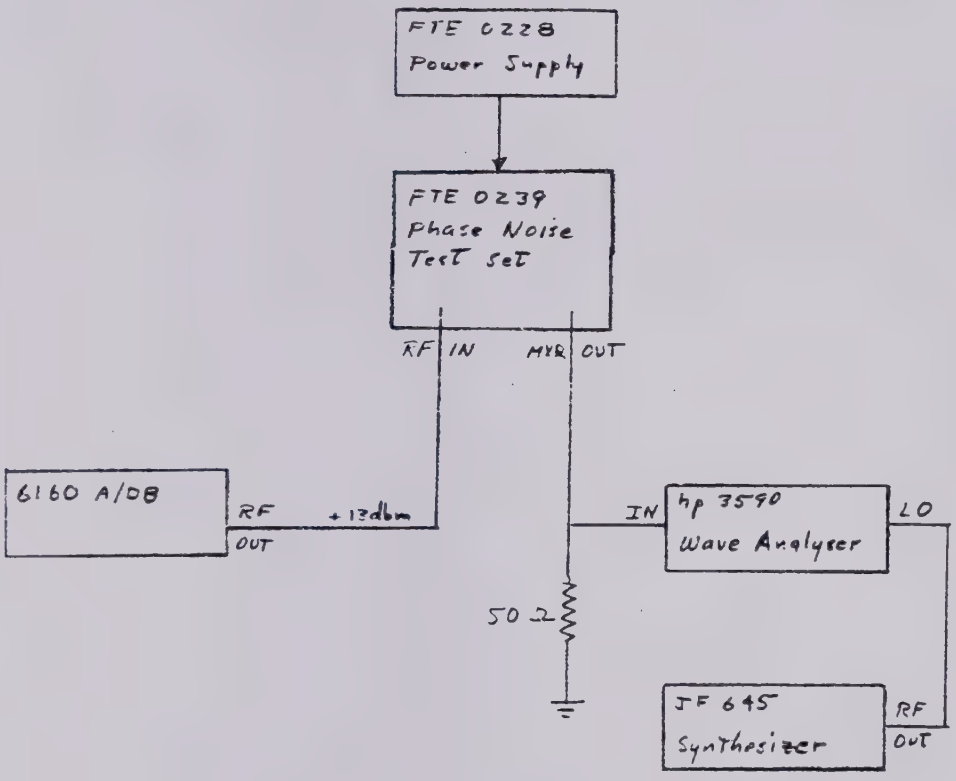

3.8.2 Set the HP3590 as follows:

Max input voltage	.01
Relative--Absolute	Relative
Meter	Normal
Range (dB)	-10
Mode	Restored
Bandwidth	10 Hz
Input Filter	620 kHz
Meter Response	Very slow

3.8.3 Set the Fluke 645 to deliver .7Vrms into the Ext. L.O. input of HP3590 at 1.280000 MHz utilizing the search oscillator in the 100 or 10 Hz decade Adjust the 645 output frequency for the notch in center of passband as noted by meter on HP3590. See figure below.

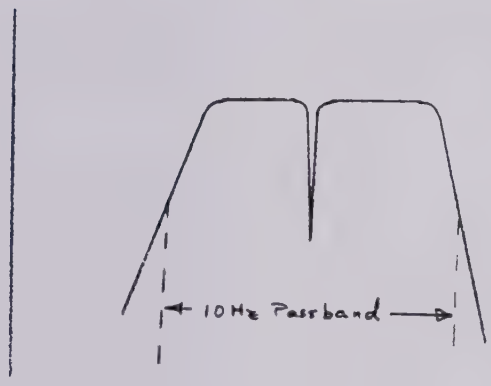

3.8.4 Do not change search oscillator setting for remaining steps.

3.8.5 Set Phase Noise test set to "160 MHz" and "Calibrate."

3.8.6 Set 6160A/DB UT to 159.990 MHz.

3.8.7 Set the 645 to 1.290003 MHz plus the search setting to Step 3.

3.8.8 Set the 3590 Range switch to 0 dB and adjust the input voltage relative adjust control for a 0 dB indication on 3590 meter.

3.8.9 Set 6160A/DB to 160 MHz by dialing 159.998 and apply +5V to the 2 bit of the 1 kHz.

3.8.10 Set the Phase Noise test set to operate and center the phase meter via the phase shifter. Note from time to time that phase meter remains centered.

3.8.11 Measure noise at 200Hz offset by setting 645 to 1.280200 MHz + search.

3.8.12 Adjust 3590 "Range" switch for on scale meter reading. Signal to noise ratio is 70 dB plus range setting plus meter indication. Record reading on data sheet.

3.8.13 Measure noise at 1 kHz offset by dialing 645 to 1.281000 MHz + search.

3.8.14 Set 3590 bandwidth to 100 Hz. Adjust "Range" switch for on scale meter reading. Signal to noise ratio is 80 dB plus range setting plus meter indication. Record reading on data sheet.

3.8.15 Measure noise at 10 kHz by dialing 645 to 1.290000 MHz + search.

3.8.16 Set 3590 bandwidth to 1 kHz. Adjust "Range" switch for on scale meter reading. Signal to noise ratio is 90 dB plus range setting plus meter indication. Record reading on data sheet.

3.8.17 Measure noise at 100 kHz by repeating steps 3.8.15 and 3.8.16 with 645 dialed to 1.380000 MHz + search. Record reading on data sheet.

3.8.18 Repeat 3.8.6 thru 3.8.17 for 6160A/DB at 80 MHz. The 6160A/DB should be dialed to 80.010 for step 3.8.6 and 80.000 MHz for step 3.8.9. Record data on data sheet.

3.9 Switching Speed Test

3.9.1 Make test set-up as described below:

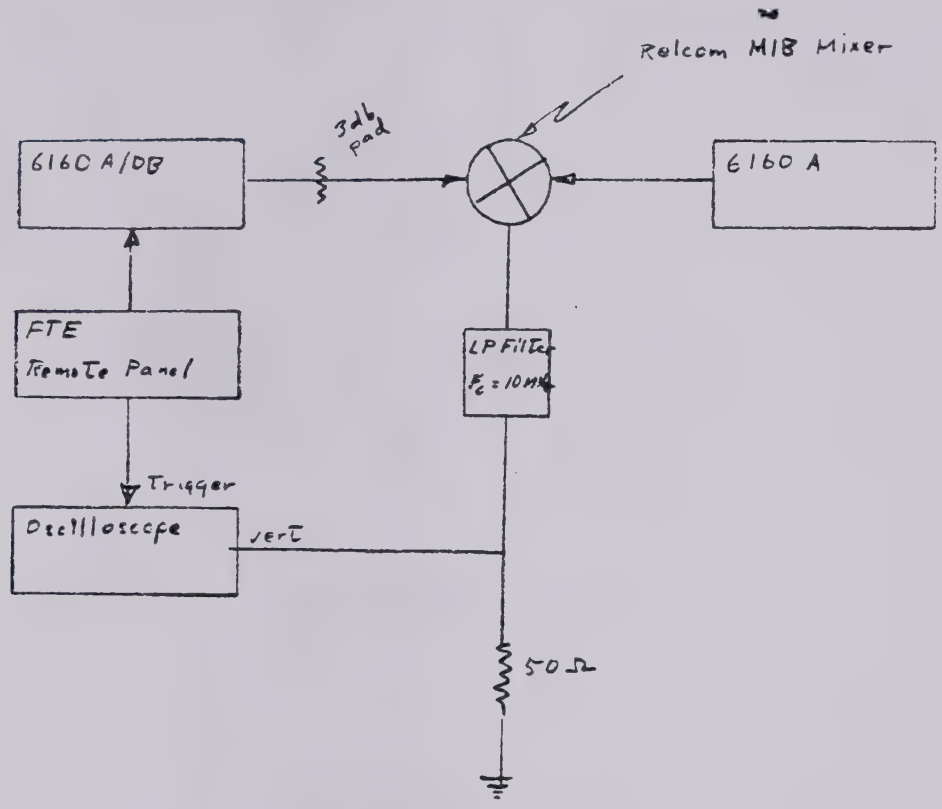

3.9.2 Adjust scope as:

Horz = 50usec/cm
Vert = convenient display
Trig = Ext

3.9.3 Set remote programmer as:

F_1 = 120.000 MHz
F_2 = 99.000 MHz
Mode = Switched

3.9.4 Set 6160A signal generator frequency to 99.002 MHz.

3.9.5 Display on scope should be as below:

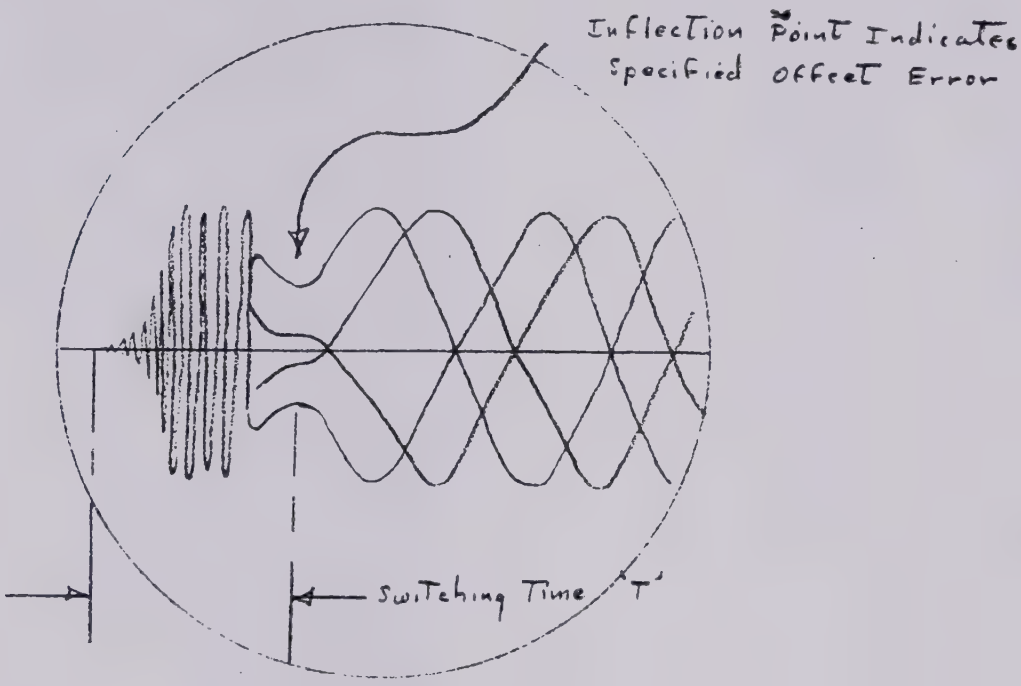

3.9.6 Perform test for frequencies listed below and record T on data sheet.

F_1	F_2	F Signal Generator (6160A)
120.000	99.000	119.998
		119.995
		120.002
		120.005
		99.002
		99.005
		98.998
		98.995
159.000	40.000	40.002
		40.005
		159.002
		159.005
		158.998
		158.995

3.9.6 continued

F_1	F_2	F Signal Generator (6160A)
111.111	79.555	111.113
		111.116
		111.109
		111.106
		79.557
		79.560
		79.553
		79.550
90.000	70.000	90.002
		90.005
		89.998
		89.995
		70.002
		70.005
		69.998
		69.995

FLUKE PRODUCTION TEST RECORD

MODEL NO. 6160A/DB SERIAL NO. DATE

TEST		LIMITS	ACTUAL	✓	T
3.1.1 Preliminary			- -		
3.1.2 Operational					
3.1.2.2		-12.000VDC±3mV	- -		
3.1.2.3		+14.000VDC±3mV	- -		
3.1.2.4		+5.000VDC±15mV	- -		
3.1.2.5		15μV rms max	- -		
3.1.2.6	40.000 MHz	±1 count	- -		
	41.111 MHz	±1 count	- -		
	42.222 MHz	±1 count	- -		
	43.333 MHz	±1 count	- -		
	44.444 MHz	±1 count	- -		
	45.555 MHz	±1 count	- -		
	46.666 MHz	±1 count	- -		
	47.777 MHz	±1 count	- -		
	48.888 MHz	±1 count	- -		
	49.999 MHz	±1 count	- -		
	50.000 MHz	±1 count	- -		
	56.789 MHz	±1 count	- -		
	66.789 MHz	±1 count	- -		
	76.789 MHz	±1 count	- -		
	79.789 MHz	±1 count	- -		
	80.000 MHz	±1 count	- -		
	90.000 MHz	±1 count	- -		
	100.000 MHz	±1 count	- -		
	110.000 MHz	±1 count	- -		
	119.999 MHz	±1 count	- -		
	120.000 MHz	±1 count	- -		
	123.456 MHz	±1 count	- -		
	133.456 MHz	±1 count	- -		
	143.456 MHz	±1 count	- -		
	153.456 MHz	±1 count	- -		
	159.999 MHz	±1 count	- -		
3.1.2.7		13dbm ±0.25db	- -		
3.2 Burn In			- -		
3.3.1.1 5MHz Level		13dbm +1db	- -		
3.3.1.2		5MHz + 1 count	- -		
3.4.2 RF Output Level		13dbm ±0.5db	- -		

TEST	LIMITS	ACTUAL	✓	T
3.5.6 RF Output Harmonics	-28db max	- -		
3.5.10 5MHz Harmonics	-43db max	- -		
3.6.4.2 Spur Test 80.010MHz	-83db max		*	
80.791MHz	-83db max		*	
80.792MHz	-83db max		*	
80.793MHz	-83db max		*	
80.794MHz	-83db max		*	
80.795MHz	-83db max		*	
80.796MHz	-83db max		*	
80.797MHz	-83db max		*	
80.799MHz	-83db max		*	
80.801MHz	-83db max		*	
80.802MHz	-83db max		*	
80.803MHz	-83db max		*	
80.806MHz	-83db max		*	
80.810MHz	-83db max		*	
80.811MHz	-83db max		*	
80.813MHz	-83db max		*	
80.814MHz	-83db max		*	
80.821MHz	-83db max		*	
80.822MHz	-83db max		*	
80.903MHz	-83db max		*	
80.933MHz	-83db max		*	
80.964MHz	-83db max		*	
80.973MHz	-83db max	✗	*	
80.993MHz	-83db max		*	
81.798MHz	-83db max		*	
81.842MHz	-83db max		*	
81.992MHz	-83db max		*	
81.995MHz	-83db max		*	
81.998MHz	-83db max		*	
87.010MHz	-83db max		*	
87.503MHz	-83db max		*	
87.504MHz	-83db max		*	
87.505MHz	-83db max		*	

Q.C. INSP. PAGE 1 OF 3 REV.

Form No. 796

FLUKE PRODUCTION TEST RECORD

MODEL NO. 6160A/DB SERIAL NO. DATE

TEST	LIMITS	ACTUAL	✓	T	TEST	LIMITS	ACTUAL	✓	T
3.6.4.2(cont) 87.511 MHz	-83db max		*		108.199 MHz	-83db max		*	
88.131 MHz	-83db max		*		108.210 MHz	-83db max		*	
88.132 MHz	-83db max		*		108.211 MHz	-83db max		*	
88.135 MHz	-83db max		*		108.212 MHz	-83db max		*	
88.137 MHz	-83db max		*		108.229 MHz	-83db max		*	
89.201 MHz	-83db max		*		108.270 MHz	-83db max		*	
89.202 MHz	-83db max		*		108.409 MHz	-83db max		*	
89.203 MHz	-83db max		*		108.419 MHz	-83db max		*	
89.207 MHz	-83db max		*		108.431 MHz	-83db max		*	
89.208 MHz	-83db max		*		108.516 MHz	-83db max		*	
89.209 MHz	-83db max		*		108.666 MHz	-83db max		*	
89.210 MHz	-83db max		*		108.761 MHz	-83db max		*	
89.211 MHz	-83db max		*		108.799 MHz	-83db max		*	
89.212 MHz	-83db max		*		108.830 MHz	-83db max		*	
89.213 MHz	-83db max		*		108.874 MHz	-83db max		*	
89.284 MHz	-83db max		*		108.899 MHz	-83db max		*	
89.745 MHz	-83db max		*		108.912 MHz	-83db max		*	
90.703 MHz	-83db max		*		108.989 MHz	-83db max		*	
90.706 MHz	-83db max		*		110.797 MHz	-83db max		*	
90.707 MHz	-83db max		*		111.105 MHz	-83db max		*	
95.982 MHz	-83db max		*		113.752 MHz	-83db max		*	
97.772 MHz	-83db max		*		115.491 MHz	-83db max		*	
97.773 MHz	-83db max		*		115.510 MHz	-83db max		*	
97.774 MHz	-83db max		*		116.663 MHz	-83db max		*	
97.777 MHz	-83db max		*		120.802 MHz	-83db max		*	
97.778 MHz	-83db max		*		121.999 MHz	-83db max		*	
97.779 MHz	-83db max		*		127.482 MHz	-83db max		*	
99.203 MHz	-83db max		*		133.333 MHz	-83db max		*	
100.792 MHz	-83db max		*		140.802 MHz	-83db max		*	
106.510 MHz	-83db max		*		141.855 MHz	-83db max		*	
106.511 MHz	-83db max		*		141.997 MHz	-83db max		*	
106.512 MHz	-83db max		*		144.247 MHz	-83db max		*	
108.038 MHz	-83db max		*		144.597 MHz	-83db max		*	
108.039 MHz	-83db max		*		146.482 MHz	-83db max		*	
108.112 MHz	-83db max		*		146 882 MHz	-83db max		*	
108.113 MHz	-83db max		*		Q.C. INSP.	PAGE 2 OF 3	REV.		
108.137 MHz	-83db max		*						

Form No. 796

FLUKE [P]RODUCTION [T]EST [R]ECORD

MODEL NO. SERIAL NO. DATE

TEST	LIMITS	ACTUAL	✓	T
3.6.4.2(cont) 150.020MHz	-83db max		*	
150.802MHz	-83db max		*	
152.597MHz	-83db max		*	
157.607MHz	-83db max		*	
157.752MHz	-83db max		*	
157.753MHz	-83db max		*	
158.863MHz	-83db max		*	
3.7.8 Wideband Phase Noise	-55db max		*	
3.8.12 Phase Noise@200Hz	-92db max		*	
3.8.14 Phase Noise@1kHz	-104db max		*	
3.8.16 Phase Noise@10kHz	-116db max		*	
3.8.17 Phase Noise@100kHz	-120db max		*	
3.8.18 Phase Noise@200Hz	-100db max		*	
Phase Noise@1kHz	-116db max		*	
Phase Noise@10kHz	-124db max		*	
Phase Noise@100kHz	-126db max		*	
3.9.6 Switching Speed				
F1 F2 F sig gen				
120.000 99.000 119.998	230µsec max		*	
120.000 99.000 119.995	200µsec max		*	
120.000 99.000 120.002	230µsec max		*	
120.000 99.000 120.005	200µsec max		*	
120.000 99.000 99.002	230µsec max		*	
120.000 99.000 99.005	200µsec max		*	
120.000 99.000 98.998	230µsec max		*	
120.000 99.000 98.995	200µsec max		*	
159.000 40.000 40.002	230µsec max		*	
159.000 40.000 40.005	200µsec max		*	
159.000 40.000 159.002	230µsec max		*	
159.000 40.000 159.005	200µsec max		*	
159.000 40.000 158.998	230µsec max		*	
159.000 40.000 158.995	200µsec max		*	
111.111 79.555 111.113	230µsec max		*	
111.111 79.555 111.116	200µsec max		*	
111.111 79.555 111.109	230µsec max		*	
111.111 79.555 111.106	200µsec max		*	
111.111 79.555 79.557	230µsec max		*	

TEST	LIMITS	ACTUAL	✓	T
111.111 79.555 79.560	200µsec max		*	
111.111 79.555 79.553	230µsec max		*	
111.111 79.555 79.550	200µsec max		*	
90.000 70.000 90.002	230µsec max		*	
90.000 70.000 90.005	200µsec max		*	
90.000 70.000 89.998	230µsec max		*	
90.000 70.000 89.995	200µsec max		*	
90.000 70.000 70.002	230µsec max		*	
90.000 70.000 70.005	200µsec max		*	
90.000 70.000 69.998	230µsec max		*	
90.000 70.000 69.995	200µsec max		*	

Q.C. INSP. PAGE 3 OF 3 REV.

Form No. 796

ACCEPTANCE TEST PROCEDURE

DOCUMENT NO: 6160A/DB-160 REV: New

TITLE: 6160A/DB FREQUENCY SYNTHESIZER

Unrestricted

No of Pages 20

PREPARED [illegible] DATE [illegible] 73
(Project Engineer)

TOOL PROOFED [illegible] DATE [illegible]
(Test Supervisor)

APPROVED Wayne Means DATE 5 Dec 74
(Manufacturing Engineer)

APPROVED [illegible] DATE 3-14-75
(Engineering Section Head)

APPROVED [illegible] DATE 4-11-75
(Quality Assurance)

Reviewed Accepted [illegible]

FLUKE

DOCUMENT CLASSIFICATION: Unrestricted

PRIMARY DISTRIBUTION:

Engineering	(1)
Customer Service	(1)
Test Engineering	(1)
Production Test	(2)
Fluke B. V.	(2)

SECONDARY DISTRIBUTION:

Name	Title	Date	Dept.	Authorization

DOCUMENT CHANGE RECORD

REV. LTR.	PAGE	DESCRIPTION OF CHANGE

TABLE OF CONTENTS

Section	Paragraph	Description	Page
		Title Page	a
		Dist. List	b
		Document Change Record	c
		Table of Contents	1
		Reference & Test Equip.	2
1.0		Purpose	3
2.0		Scope	3
3.0		Procedure	3 - 14
	3.1	Synthesis Test	3
	3.2	Output Levels	4
	3.3	Harmonic Distortion	4 - 5
	3.4	Spurious Output Signals	5 - 9
	3.5	Phase Noise	5 - 11
	3.6	Switching Speed	12 - 14
		Acceptance Test Record	15 - 17

REFERENCE AND TEST EQUIPMENT

The following equipment is required for acceptance testing of the 6160A/DB Synthesizer.

1) RF Voltmeter HP411 or equivalent
2) Frequency counter with 100mV sensitivity and 1 - 200MHz frequency range.
3) 50 BNC resistive load
4) Remote programming fixture FTE-0332
5) Spectrum Analyzer HP141T display unit with:
   8552B IF section
   8553B RF section
   8555A RF section
6) Spurious Test Set FTE 0311
7) Signal Generator HP8640 or equivalent
8) Oscilloscope
9) Phase noise test set FTE 0239
10) Power Supply FTE 0228
11) Wave Analyzer HP3590 or equivalent
12) JF 645 Synthesizer
13) Relcom MIB Mixer
14) Co-ax pad 3db
15) Low pass filter fc = 10MHz

Calibration Requirements

Each instrument listed above shall be calibrated in its normal factor specified cycle or evidenced by a valid calibration sticker.

1.0 PURPOSE

The purpose of this test procedure is to verify the performance of the 6160A/DB Frequency Synthesizer to the specification requirements.

2.0 SCOPE

This procedure defines tests to be performed on the first deliverable 6160A/DB Frequency Synthesizer. These tests will be witnessed and verified by a customer representitive. Subsequent units may be subjected to these tests if requested and witnessed by a customer representitive. These tests may be performed over environmental conditions as defined in the 6160A/DB specification documents.

3.0 TEST PROCEDURE

3.1 Synthesis Test

3.1.1 Connect 6160A/DB to counter and Remote Control Panel (FTE -0332) as below:

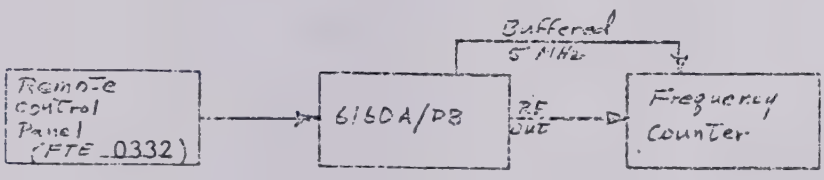

3.1.2 Check for correct synthesis at frequencies specified below:

Dial Settings		
40.000	49.999	110.000
41.111	50.000	119.000
42.222	56.789	120.000
43.333	66.789	123.456
44.444	76.789	133.456
45.555	79.789	143.456
46.666	80.000	153.456
47.777	90.000	159.999
48.888	100.000	

3.2 Output Levels

3.2.1 Buffered 5MHz output

3.2.1.1 Connect RF Voltmeter terminated with 50 ohms to Buffered 5MHz output and check for +13dbm ± 1db.

3.2.1.2 Connect RF Voltmeter terminated with 50 ohms to RF output and check for ±13dbm ± 1db as frequency is dialed from 40.000MHz to 159.999MHz in 10MHz steps.

3.3 Harmonic Distortion

3.3.1 Connect "RF Output" on 6160A/DB to HP8555A Spectrum Analyzer.

3.3.2 Set Frequency Dialed to 80MHz.

3.3.3 Set 8555A Spectrum Analyzer controls as follows:

1. Bandwidth - 300kHz
2. Scanwidth - 100MHz
3. Max Input Level - 100MV
4. Scan Time - 5msec
5. Log Ref Level - 10db Log Position
6. Video Filter - OFF
7. Scan Mode - Int.
8. Scan Trigger - Auto

3.3.4 Adjust "Persistance" & "Intensity" controls for display (excessive brightness should be avoided as this could damage the CRT).

3.3.5 Adjust "LOG Ref Level" & Linear Sensitivity" controls for a -10db ref display of the 80MHz signal.

3.3.6 Rotate 2 highest digits on remote programming fixture thru their range observing a minimum signal to harmonic ratio of 25db.

3.3.7 Disconnect spectrum analyzer from "RF Output" and connect to "5MHz Output."

3.3.8 Set 855A Spectrum Analyzer controls as in 3.6.3 and 3.6.4.

3.3.9 Adjust "LOG Ref Level" & "Linear Sensitivity" controls for a -10db reference display of the 5MHz signal.

3.3.10 Observe a minimum signal to harmonic ratio of 40db.

3.4 Spurious Output Signals

3.4.1 Install top cover

3.4.2 Connect the 6160A/DB under test to the spur test set (FTE 0311) as below:

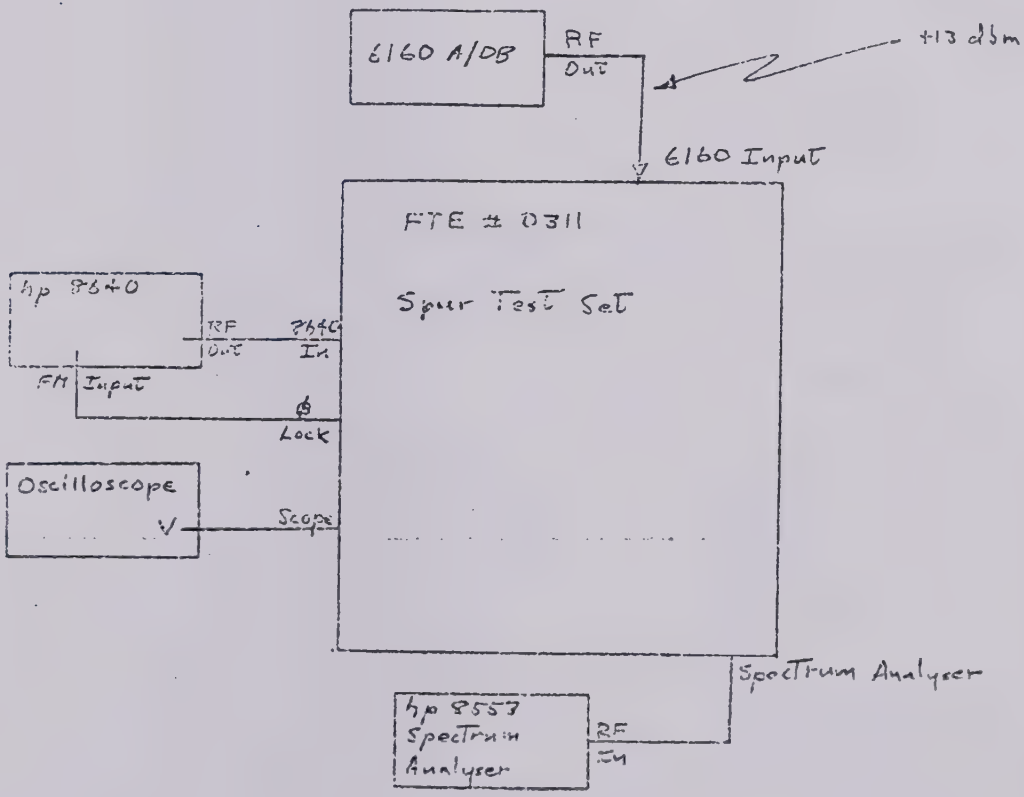

3.4.3 Calibrate spur test set

3.4.3.1 Disconnect phase lock input from signal generator.

3.4.3.2 Set 355D step attenuator to 90 dB.

3.4.3.3 Set signal generator controls as:

Line	ON
Level	volts
AM switch	OFF
PM switch	DC
Peak deviation	160kHz
Peak deviation vernier	fully cw
Counter mode	Int
Time vernier	Cal
RF	ON
Range	As required
Freq tune	As required
Fine tune	As required
Output level	0 dBm

Adjust frequency tune and fine tune for a reading of 100.000 MHz on the counter.

3.4.3.4 Set the 6160A/DB frequency to 100.100 MHz.

3.4.3.5 Set the Spectrum Analyzer controls as:

Range	0-11MHz
Bandwidth	1kHz
Scanwidth/div	20kHz
Input Attenuator	10dB
Video Filter	100Hz
Scantime/div	0.5 sec
Mode Switch	10dB log
Scan Mode	Int
Scan Trigger	Auto
Log ref level	As required
Display	As required
Frequency	As required
Fine Frequency	As required

Adjust the Frequency and Fine Frequency tuning such that the Spectrum Analyzer zero frequency line is on the left vertical graticule and the 100kHz beat frequency line is on the center vertical graticule.

Adjust the log ref level controls such that the 100kHz beat frequency line level is at -46 dB.

The spur test set is now calibrated such that the -40 dB reference line on the Spectrum Analyzer will indicate a -80 dB spurious signal level.

3.4.3.6 Set the HP355D step attenuator to 10 dB and connect the phase lock input to the signal generator.

3.4.4 Spur Test

3.4.4.1 For all of the frequencies listed, dial the signal generator and the 6160A/DB under test to the indicated frequency and note phase lock by an approximate 0 VDC level and no beat frequency as appears on the oscilloscope.

3.4.4.2 Examine all of the frequencies below for spurious signals. On the data sheet, note the offset and level of any spurious signals less than 85 dB down (-45 dB ref line on the Spectrum Analyzer).

Dial Frequency (MHz)	Dial Frequency (MHz)
80.010	80.801
.791	.802
	.803
.793	.806
.794	.810
.795	.811
.796	.813
.797	.814
80.799	80.821

Dial Frequency (MHz)	Dial Frequency (MHz)
80.822	108.038
.903	.039
.933	.112
.964	.113
.973	.137
80.993	.199
81.798	.210
.842	.211
.992	.212
.995	.229
81.998	.270
87.010	
.503	
.504	.431
.505	.516
87.511	.666
88.131	.761
.132	.799
.135	.830
88.137	.874
89.201	.899
.202	.912
.203	108.989
.207	110.797
.208	111.105
.209	113.752
.210	115.491
.211	115.510
.212	116.663
.213	120.802
.284	121.999
89.745	127.482
90.703	133.333
.706	140.802
90.707	141.855
95.982	141.997
97.772	144.247
.773	144.597
.774	146.482
.777	146.882
.778	150.020
97.779	150.802
99.203	152.597
100.792	157.607
	.752
	157.753
	158.863

3.4.3.3 After completing the list above, if any spurs are less than 85db down, recalibrate the test set-up at the frequency and offset of interest and recheck the questionable spurs.

3.5 Phase Noise

3.5.1 Connect the phase noise test set FTE 0239 as shown below:

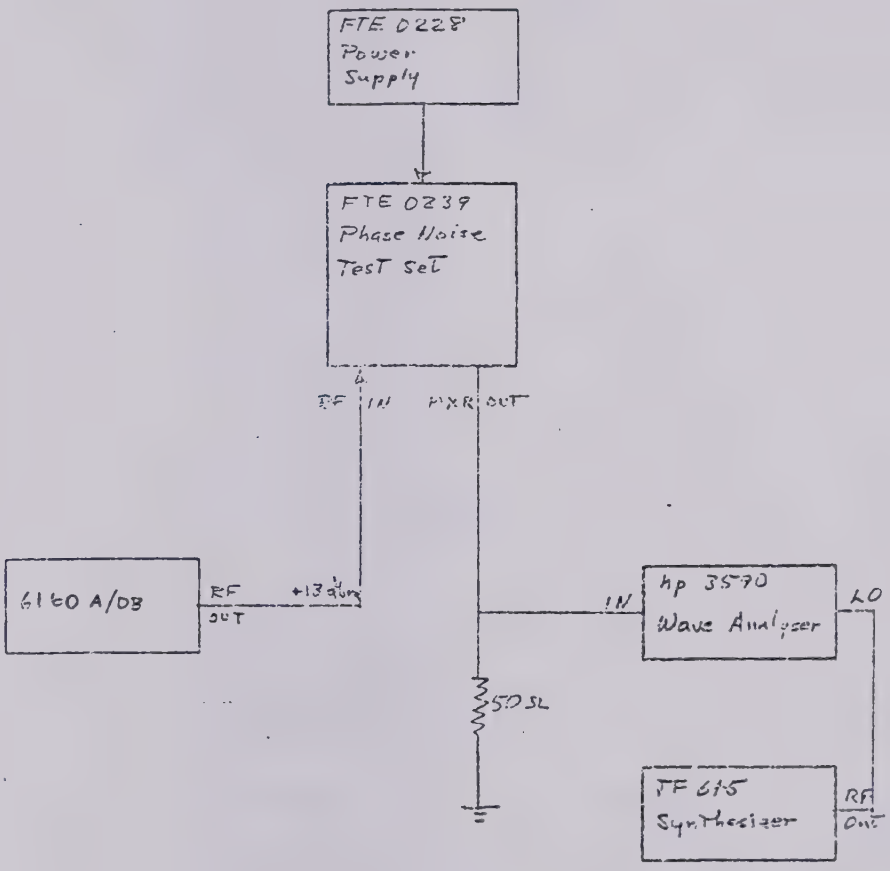

3.5.2 Set the HP3590 as follows:

Max input voltage	.01
Relative--Absolute	Relative
Meter	Normal
Range (dB)	-10
Mode	Restored
Bandwidth	10 Hz
Input Filter	620 kHz
Meter Response	Very slow

3.5.3 Set the Fluke 645 to deliver .7Vrms into the Ext. L.O. input of HP3590 at 1.280000 MHz utilizing the search oscillator in the 100 or 10 Hz decade Adjust the 645 output frequency for the notch in center of passband as noted by meter on HP3590. See figure below.

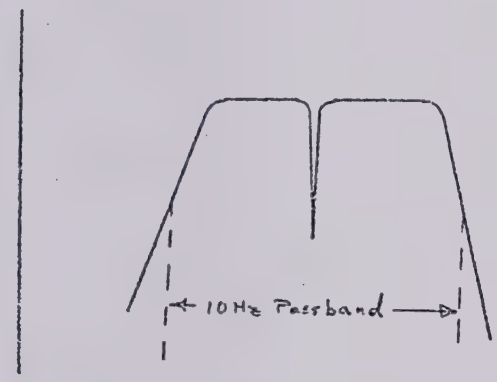

3.5.4 Do not change search oscillator setting for remaining steps.

3.5.5 Set Phase Noise test set to "160 MHz" and "Calibrate."

3.5.6 Set 6160A/DB UT to 159.990 MHz.

3.5.7 Set the 645 to 1.290003 MHz plus the search setting to Step 3.

3.5.8 Set the 3590 Range switch to 0 dB and adjust the input voltage relative adjust control for a 0 dB indication on 3590 meter.

3.5.9 5 Set 6160A/DB to 160 MHz by dialing 159.998 and apply +5V to the 2 bit of the 1 kHz.

3.5.10 Set the Phase Noise test set to operate and center the phase meter via the phase shifter. Note from time to time that phase meter remains centered.

3.5.11 Measure noise at 200Hz offset by setting 645 to 1.280200 MHz + search.

3.5.12 Adjust 3590 "Range" switch for on scale meter reading. Signal to noise ratio is 70 dB plus range setting plus meter indication. Record reading on data sheet.

3.5.13 Measure noise at 1 kHz offset by dialing 645 to 1.281000 MHz + search.

3.5.14 Set 3590 bandwidth to 100 Hz. Adjust "Range" switch for on scale meter reading. Signal to noise ratio is 80 dB plus range setting plus meter indication. Record reading on data sheet.

3.5.15 Measure noise at 10 kHz by dialing 645 to 1.290000 MHz + search.

3.5.16 Set 3590 bandwidth to 1 kHz. Adjust "Range" switch for on scale meter reading. Signal to noise ratio is 90 dB plus range setting plus meter indication. Record reading on data sheet.

3.5.17 Measure noise at 100 kHz by repeating steps 3.8.15 and 3.8.16 with 645 dialed to 1.380000 MHz + search. Record reading on data sheet.

3.5.18 Repeat 3.8.6 thru 3.8.17 for 6160A/DB at 60 MHz. The 6160A/DB should be dialed to 60.010 for step 3.8.6 and 60.000 MHz for step 3.8.9. Record data on data sheet.

3.6 Switching Speed Test

3.6.1 Make test set-up as described below:

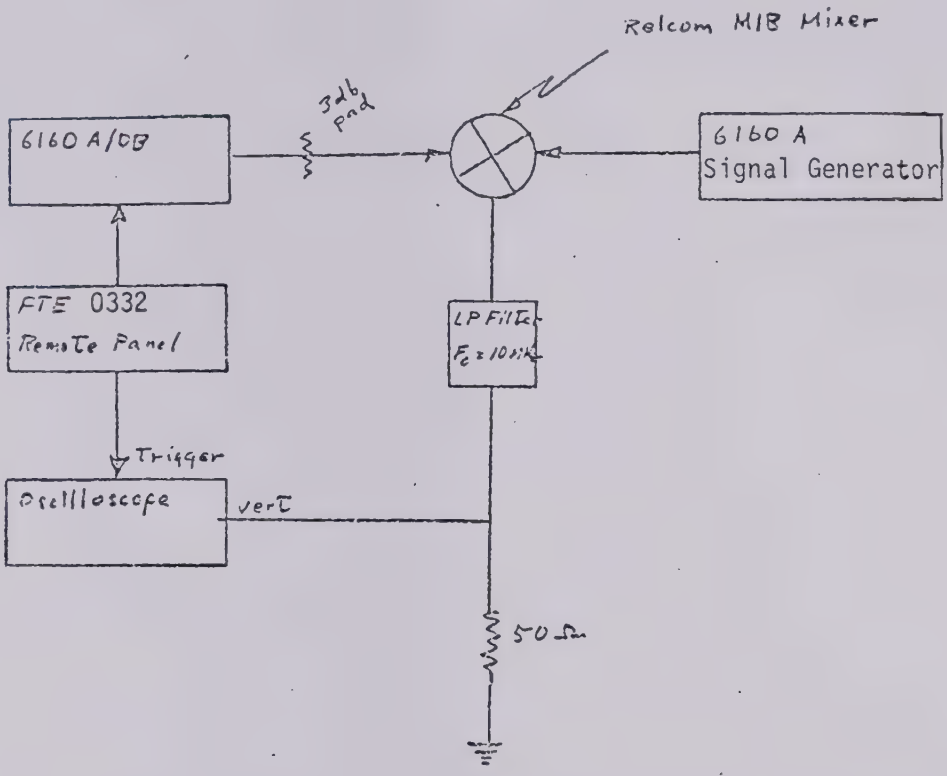

3.6.2 Adjust scope as:

Horz = 50usec/cm
Vert = convenient display
Trig = Ext

3.6.3 Set remote programmer as:

F_1 = 120.000 MHz
F_2 = 99.000 MHz
Mode = Switched

3.6.4 Set signal generator frequency to 99.002 MHz

3.6.5 Display on scope should be as below:

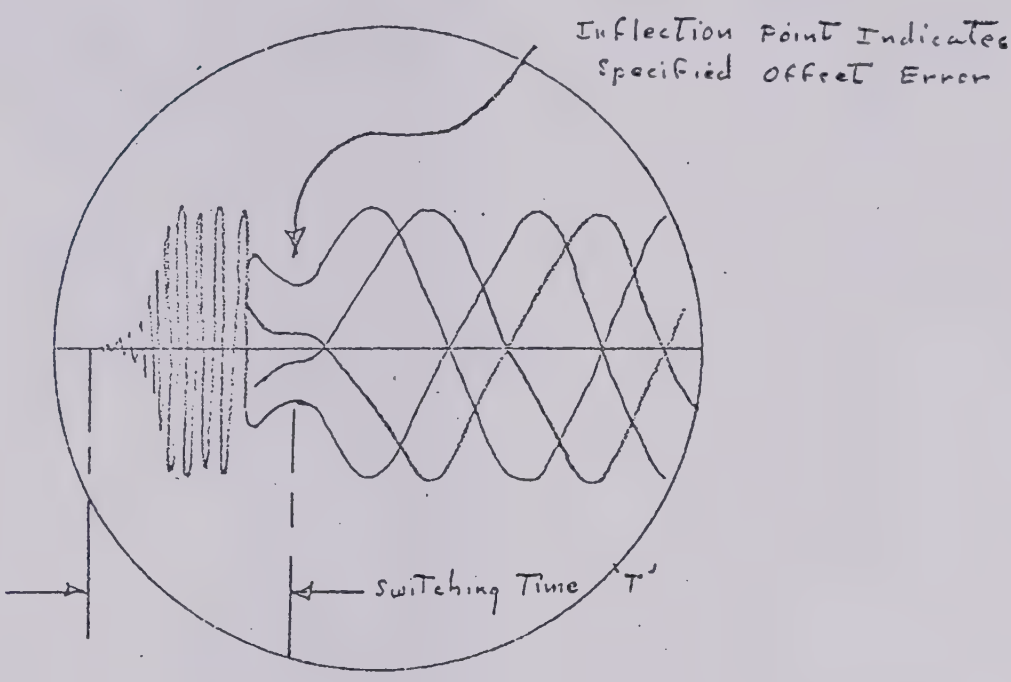

3.6.6 Perform test for frequencies listed below and record T on data sheet.

F_1	F_2	F Signal Generator
120.000	99.000	119.998
		119.995
		120.002
		120.005
		99.002
		99.005
		98.998
		98.995
159.000	40.000	40.002
		40.005
		159.002
		159.005
		158.998
		158.995

3.6.6 continued

F_1	F_2	F Signal Generator
111.111	79.555	111.113
		111.116
		111.109
		111.106
		79.557
		79.560
		79.553
		79.550
90.000	70.000	90.002
		90.005
		89.998
		89.995
		70.002
		70.005
		69.998
		69.995

FLUKE [A]CCEPTANCE [T]EST [R]ECORD

MODEL NO. 6160A/D SERIAL NO. DATE

TEST	LIMITS	ACTUAL	✓	T
3.1.2 Synthesis Test				
40.000 MHz	+ 1 count	- -		
41.111 MHz				
42.222 MHz				
43.333 MHz				
44.444 MHz				
45.555 MHz				
46.666 MHz				
47.777 MHz				
48.888 MHz				
49.999 MHz				
50.000 MHz				
56.789 MHz				
66.789 MHz				
76.789 MHz				
79.789 MHz				
80.000 MHz				
90.000 MHz				
100.000 MHz				
110.000 MHz				
119.999 MHz				
120.000 MHz				
123.456 MHz				
133.456 MHz				
143.456 MHz				
153.456 MHz				
159.999 MHz				
3.2.1.1 5MHz Level	13dbm ± 1db			
3.2.1.2 RF Output Level	13dbm ± 1db			

TEST	LIMITS	ACTUAL	✓	T
3.3.6 RF Output Harmonics	-25db max			
3.3.10 5MHz Harmonics	-40db max			
3.4.4.2 Spur Test 80.010MHz	-80db max		*	
80.791MHz			*	
80.793MHz			*	
80.794MHz			*	
80.795MHz			*	
80.796MHz			*	
80.797MHz			*	
80.799MHz			*	
80.801MHz			*	
80.802MHz			*	
80.803MHz			*	
80.806MHz			*	
80.810MHz			*	
80.811MHz			*	
80.813MHz			*	
80.814MHz			*	
80.821MHz			*	
80.822MHz			*	
80.903MHz			*	
80.933MHz			*	
80.964MHz			*	
80.973MHz			*	
80.993MHz		✓	*	
81.798MHz			*	
81.842MHz			*	
81.992MHz			*	
81.995MHz			*	
81.998MHz			*	
87.010MHz			*	
87.503MHz			*	
87.504MHz			*	
87.505MHz			*	

Q.C. INSP.

PAGE 1 OF 3

REV.

FLUKE [A]CCEPTANCE [T]EST [R]ECORD

MODEL NO.6160A/DB SERIAL NO. DATE

TEST	LIMITS	ACTUAL	✓	T
3.4.4.2 (cont.)87.511MHz	-80db max		*	
88.131MHz			*	
88.132MHz			*	
88.135MHz			*	
88.137MHz			*	
89.201MHz			*	
89.202MHz			*	
89.203MHz			*	
89.207MHz			*	
89.208MHz			*	
89.209MHz			*	
89.210MHz			*	
89.211MHz			*	
89.212MHz			*	
89.213MHz			*	
89.284MHz			*	
89.745MHz			*	
90.703MHz			*	
90.706MHz			*	
90.707MHz			*	
95.982MHz			*	
97.772MHz			*	
97.773MHz			*	
97.774MHz			*	
97.777MHz			*	
97.778MHz			*	
97.779MHz			*	
99.203MHz			*	
100.792MHz			*	
108.038MHz			*	
108.039MHz			*	
108.112MHz			*	
108.113MHz			*	
108.137MHz			*	

TEST	LIMITS	ACTUAL	✓	T
108.199MHz	-80db max		*	
108.210MHz			*	
108.211MHz			*	
108.212MHz			*	
108.229MHz			*	
108.270MHz			*	
108.431MHz			*	
108.516MHz			*	
108.666MHz			*	
108.761MHz			*	
108.799MHz			*	
108.830MHz			*	
108.874MHz			*	
108.899MHz			*	
108.912MHz			*	
108.989MHz			*	
110.797MHz			*	
111.105MHz			*	
113.752MHz			*	
115.491MHz			*	
115.510MHz			*	
116.663MHz			*	
120.802MHz			*	
121.999MHz			*	
127.482MHz			*	
133.333MHz			*	
140.802MHz			*	
141.855MHz			*	
141.997MHz			*	
144.247MHz			*	
144.597MHz			*	
146.482MHz			*	
146.882MHz			*	

Q.C. INSP. PAGE 2 OF 3 REV.

Form No. 779

FLUKE ACCEPTANCE TEST RECORD

MODEL NO. 6160A/DB SERIAL NO. DATE

TEST	LIMITS	ACTUAL	✓	T
3.4.4.2(cont) 150.020MHz	-80db max		*	
150.802MHz			*	
152.597MHz			*	
157.607MHz			*	
157.752MHz			*	
157.753MHz			*	
158.863MHz			*	
3.5.11 Phase Noise@200Hz	-92db max		*	
3.5.13 Phase Noise@1kHz	-104db max		*	
3.5.15 Phase Noise@10kHz	-116db max		*	
3.5.17 Phase Noise@100kHz	-120db max		*	
3.5.18 Phase Noise@200Hz	-100db max		*	
Phase Noise@1kHz	-116db max		*	
Phase Noise@10kHz	-124db max		*	
Phase Noise@100kHz	-126db max		*	
3.6.6 Switching Speed				
F1 F2 F Sig gen				
120.000 99.000 119.998	250µsec max		*	
120.000 99.000 119.995	220µsec max		*	
120.000 99.000 120.002	250µsec max		*	
120.000 99.000 120.005	220µsec max		*	
120.000 99.000 99.002	250µsec max		*	
120.000 99.000 99.005	220µsec max		*	
120.000 99.000 98.998	250µsec max		*	
120.000 99.000 98.995	220µsec max		*	
159.000 40.000 40.002	250µsec max		*	
159.000 40.000 40.005	220µsec max		*	
159.000 40.000 159.002	250µsec max		*	
159.000 40.000 159.005	220µsec max		*	
159.000 40.000 158.998	250µsec max		*	
159.000 40.000 158.995	220µsec max		*	
111.111 79.555 111.113	250µsec max		*	
111.111 79.555 111.116	220µsec max		*	
111.111 79.555 111.109	250µsec max		*	
111.111 79.555 111.106	220µsec max		*	
111.111 79.555 79.557	250µsec max		*	

TEST	LIMITS	ACTUAL	✓	T
111.111 79.555 79.560	220 sec max		*	
111.111 79.555 79.560	250 sec max		*	
111.111 79.555 79.560	220 sec max		*	
90.000 70.000 90.002	250 sec max		*	
90.000 70.000 90.005	220 sec max		*	
90.000 70.000 89.998	250 sec max		*	
90.000 70.000 89.995	220 sec max		*	
90.000 70.000 70.002	250 sec max		*	
90.000 70.000 70.005	220 sec max		*	
90.000 70.000 69.998	250 sec max		*	
90.000 70.000 69.995	220 sec max		*	

Q.C. INSP.

PAGE 3 OF 3

REV.

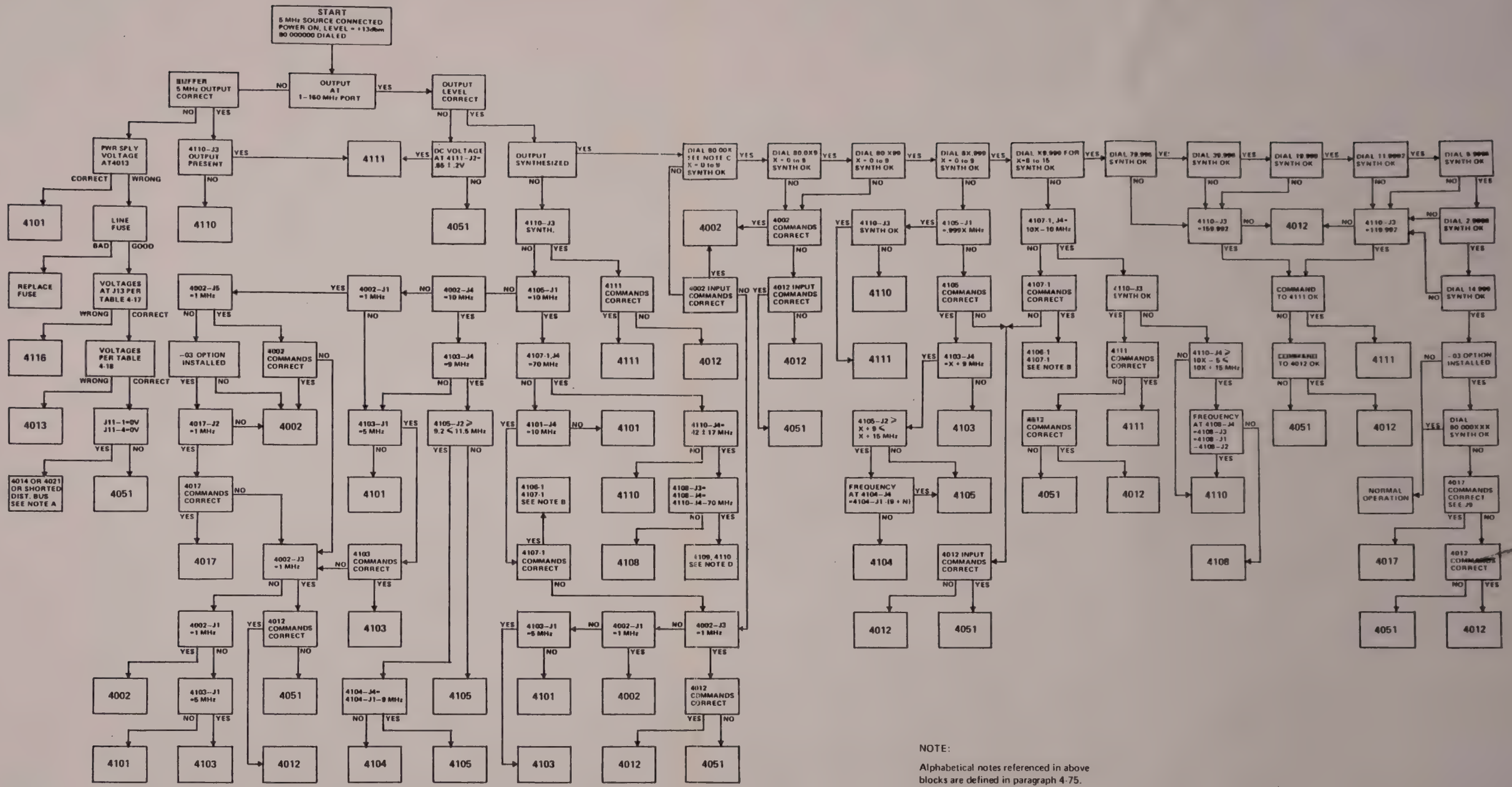

NOTE:

Alphabetical notes referenced in above blocks are defined in paragraph 4-75.

FIGURE 8-1. MODEL 6160A TROUBLESHOOTING CHART (6160A-1600)

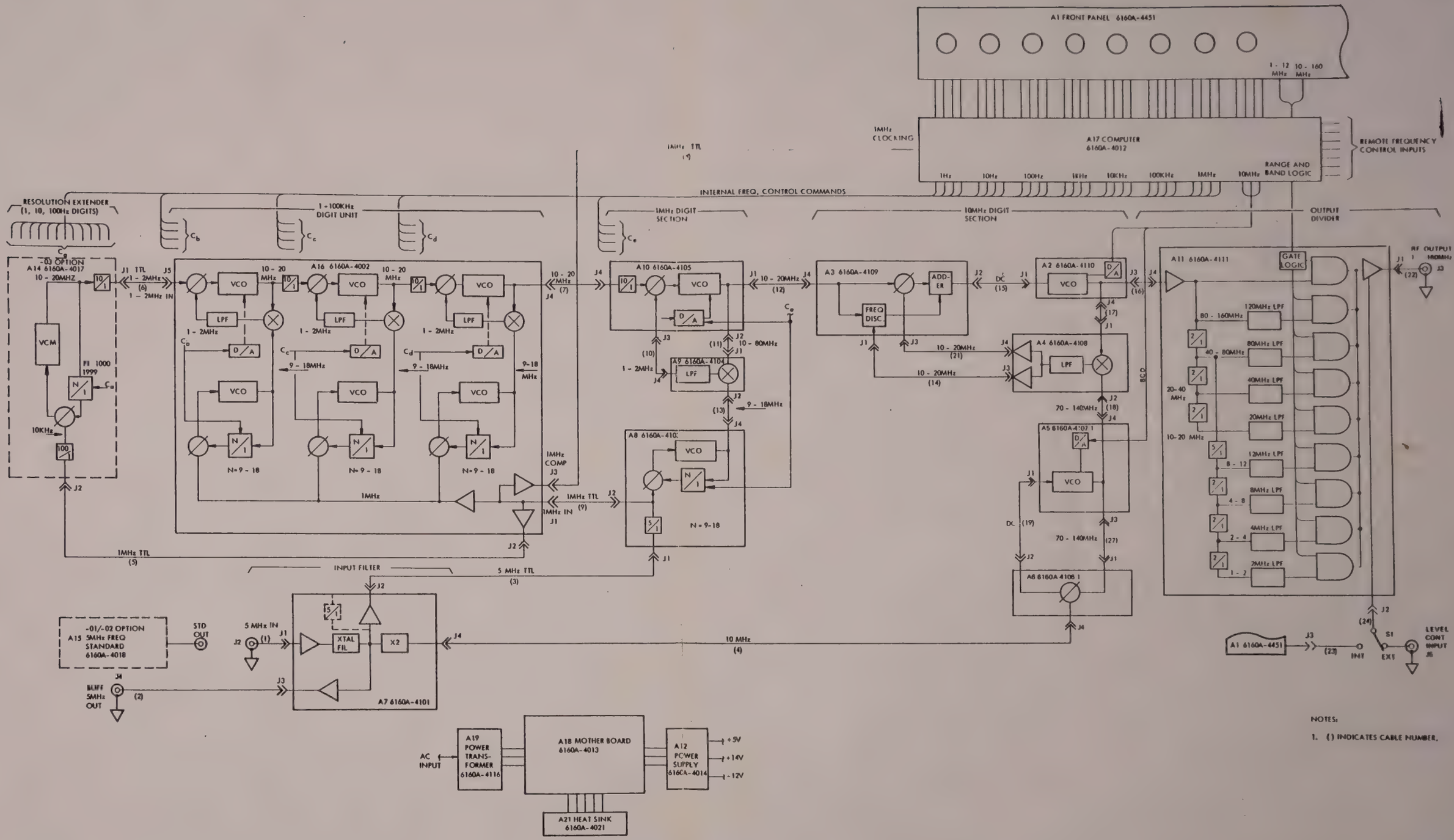

NOTES:

1. ( ) INDICATES CABLE NUMBER.

FIGURE 8-2. MODEL 6160A BLOCK DIAGRAM (6160A-1501)

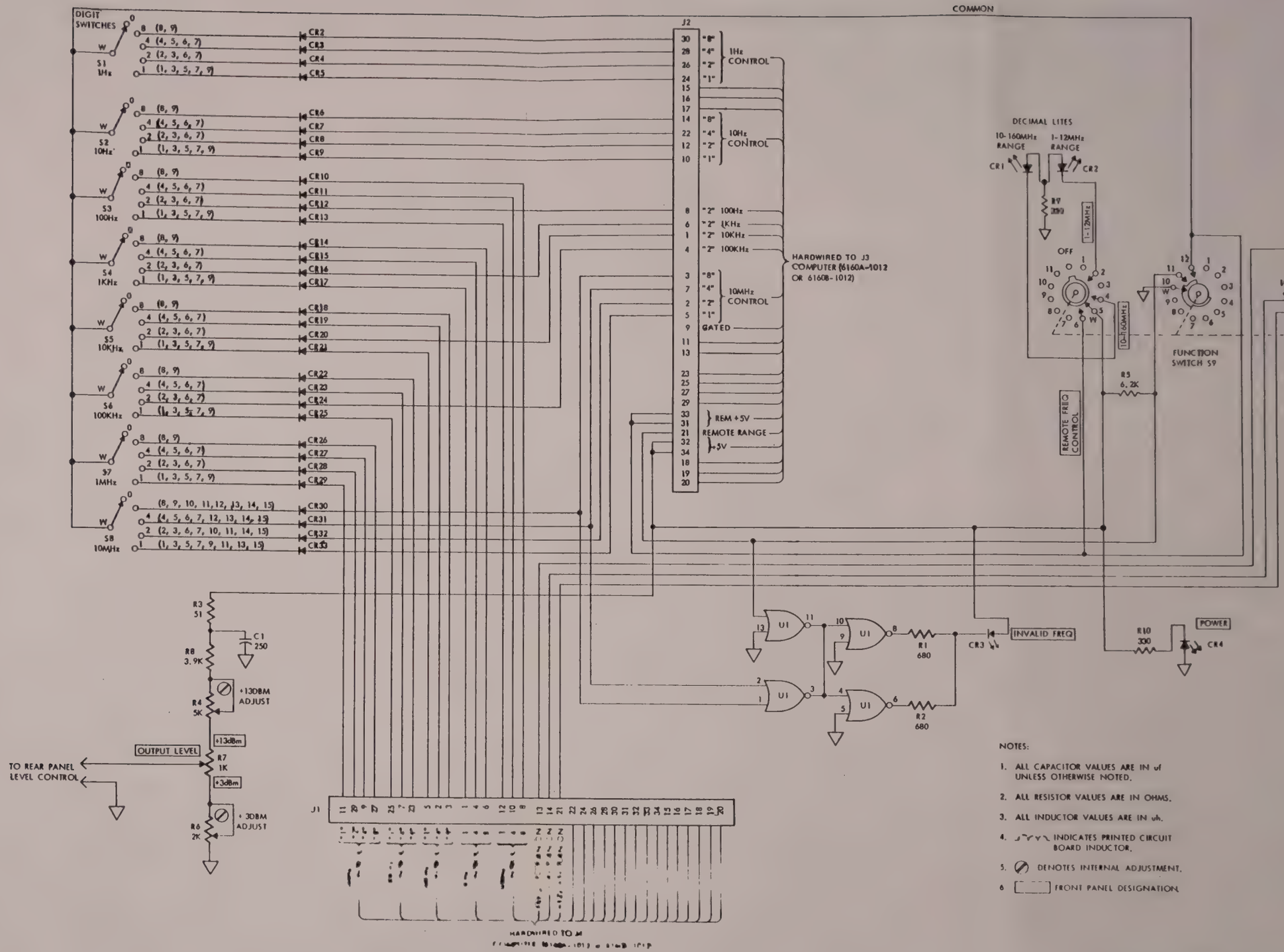

NOTES:

1. ALL CAPACITOR VALUES ARE IN uf UNLESS OTHERWISE NOTED.
2. ALL RESISTOR VALUES ARE IN OHMS.
3. ALL INDUCTOR VALUES ARE IN uh.
4. ⌇⌇⌇ INDICATES PRINTED CIRCUIT BOARD INDUCTOR.
5. ⊘ DENOTES INTERNAL ADJUSTMENT.
6. [ ] FRONT PANEL DESIGNATION.

FIGURE 8-3. A1A1 FRONT PANEL PCB ASSEMBLY (6160A-1051)

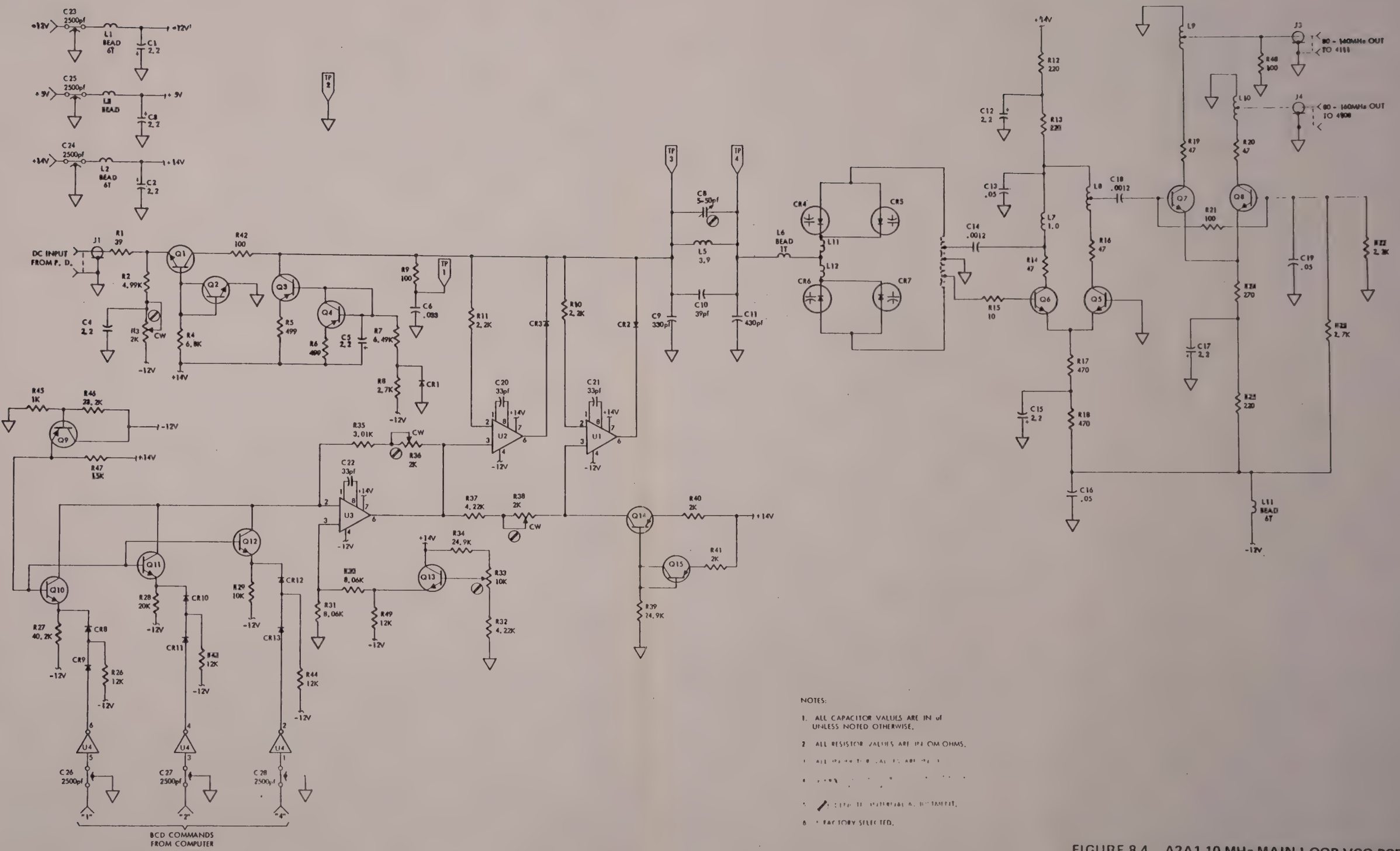

NOTES:

1. ALL CAPACITOR VALUES ARE IN μf UNLESS NOTED OTHERWISE.
2. ALL RESISTOR VALUES ARE IN OHMS.
3. [illegible]
4. [illegible]
5. [illegible]
6. * FACTORY SELECTED.

FIGURE 8-4. A2A1 10 MHz MAIN LOOP VCO PCB ASSEMBLY (6160A-1010)

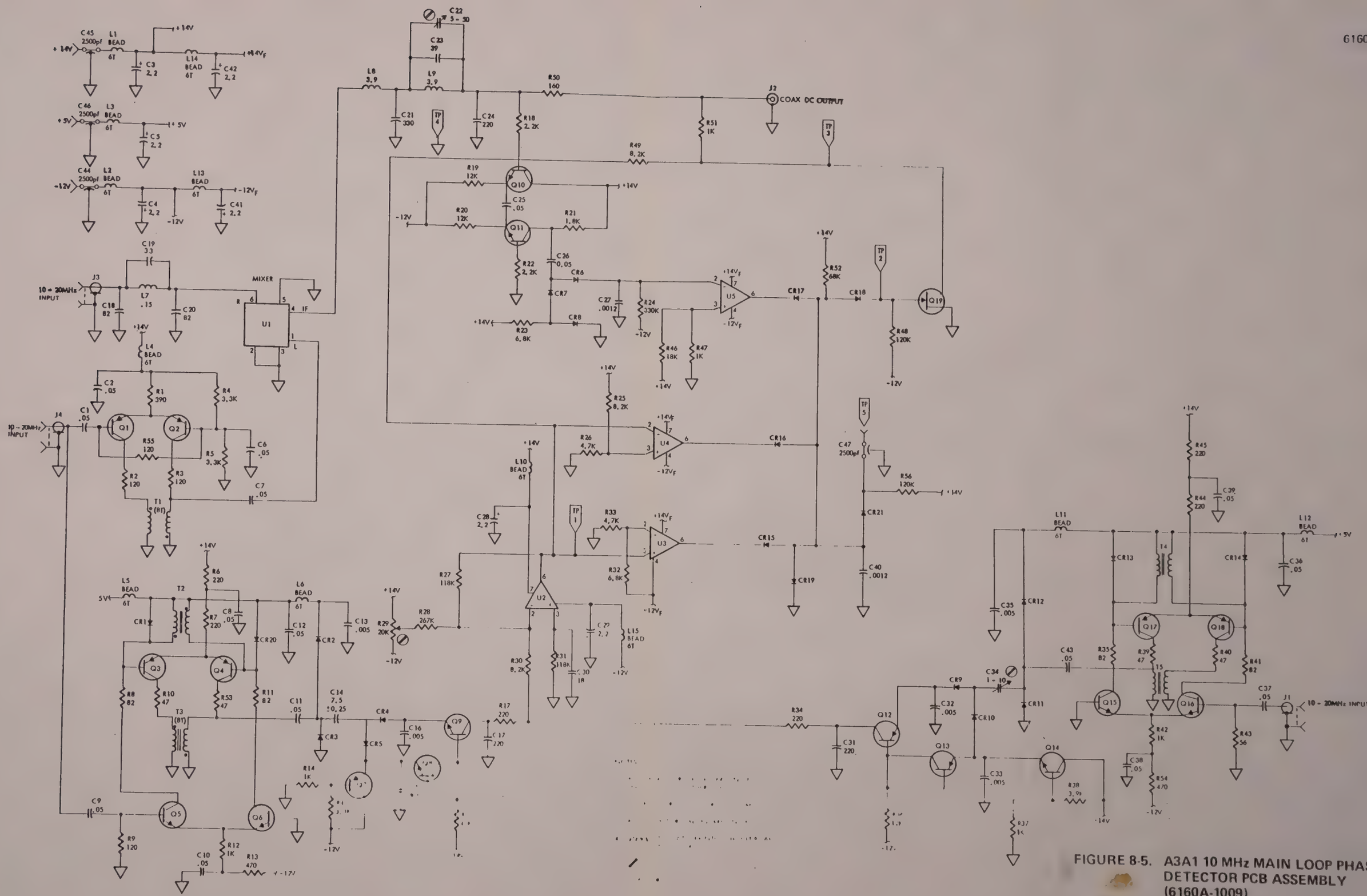

FIGURE 8-5. A3A1 10 MHz MAIN LOOP PHASE DETECTOR PCB ASSEMBLY (6160A-1009)

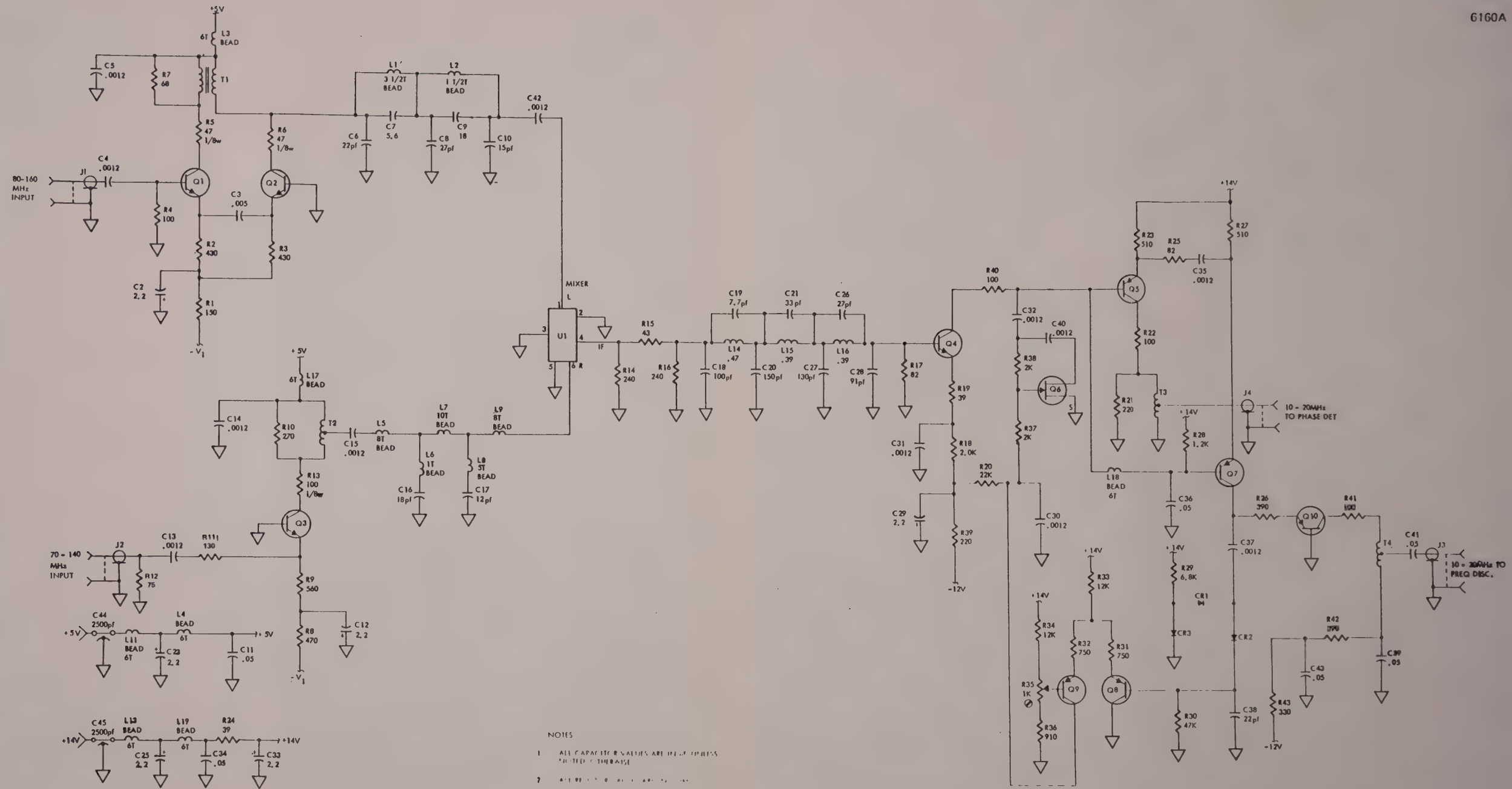

NOTES

1. ALL CAPACITOR VALUES ARE IN μF UNLESS NOTED OTHERWISE.
2. [illegible]
3. [illegible]
4. [illegible]
5. [illegible]
6. * FACTORY SELECTED.

FIGURE 8-6. A4A1 10 MHz I.F. MIXER PCB ASSEMBLY (6160A-1008)

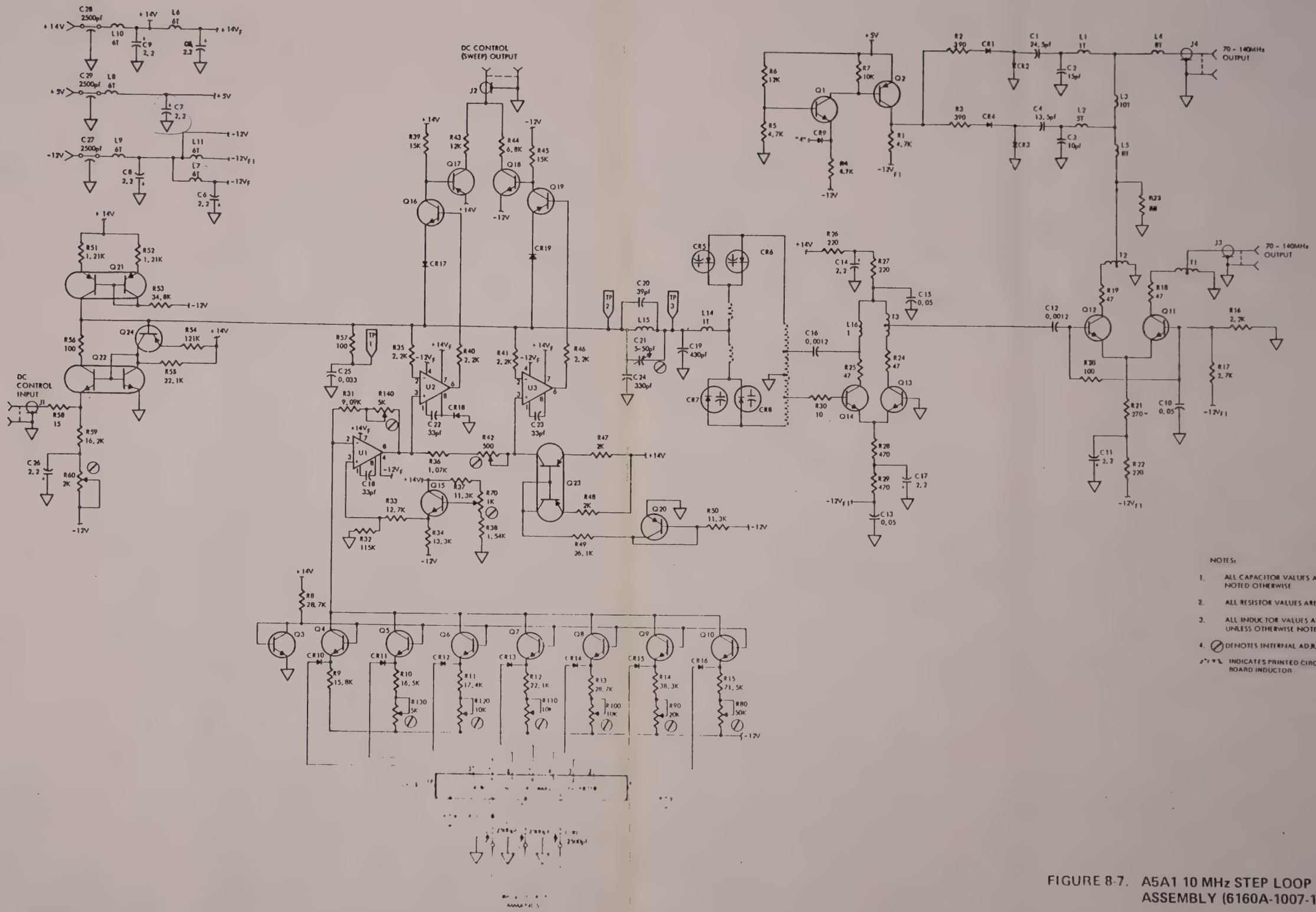

FIGURE 8-7. A5A1 10 MHz STEP LOOP VCO PCB ASSEMBLY (6160A-1007-1)

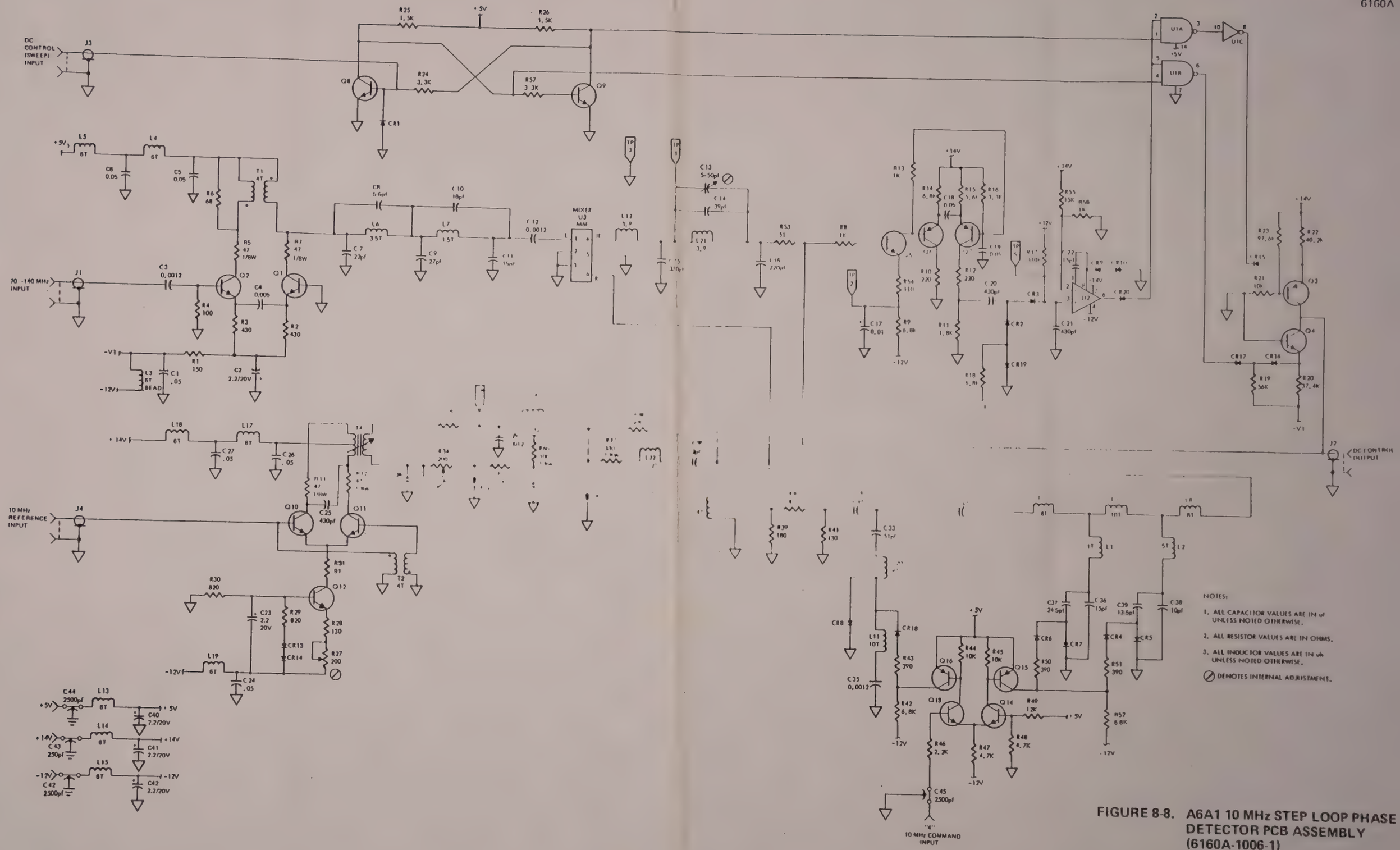

FIGURE 8-8. A6A1 10 MHz STEP LOOP PHASE DETECTOR PCB ASSEMBLY (6160A-1006-1)

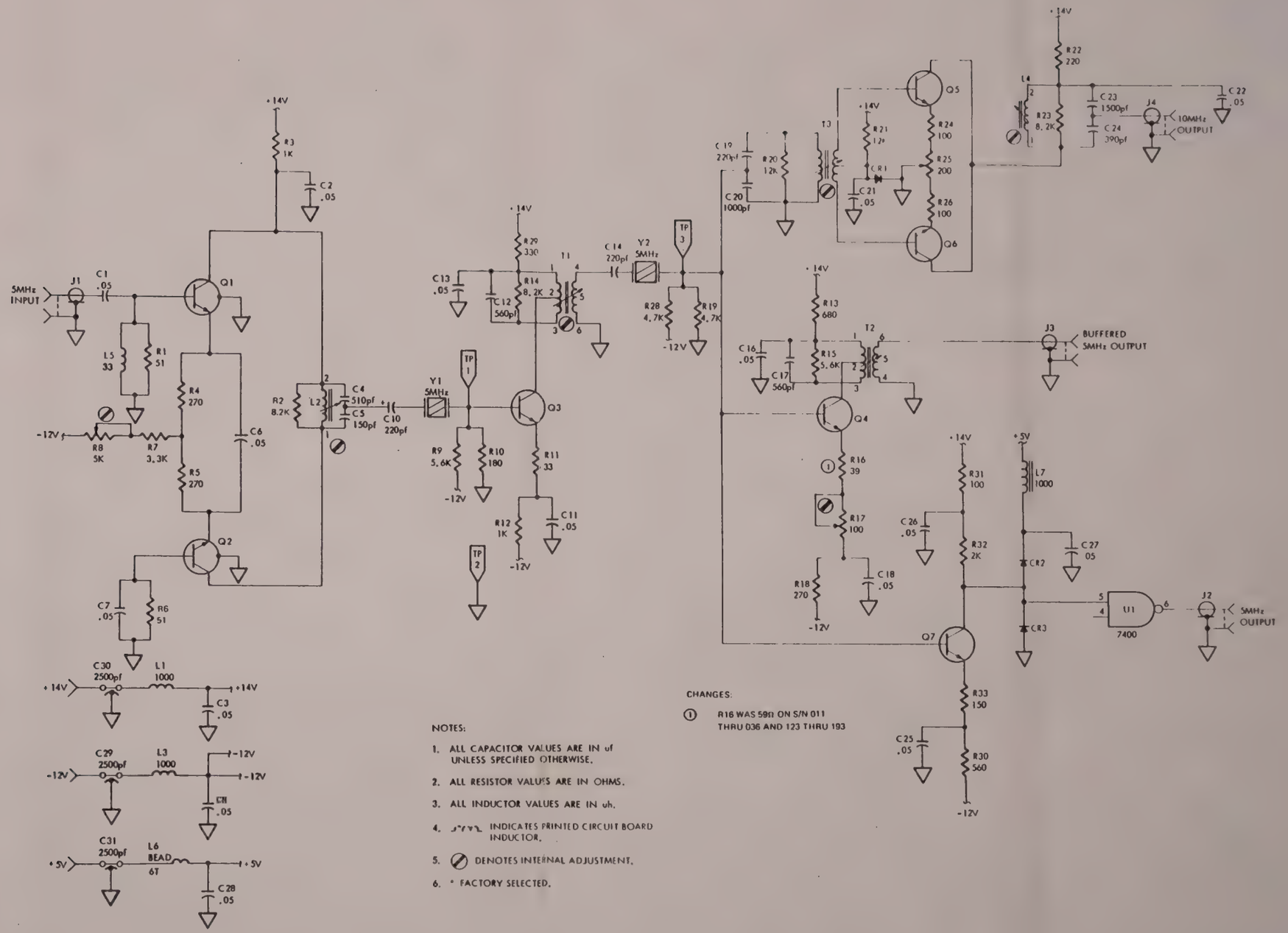

NOTES:

1. ALL CAPACITOR VALUES ARE IN uf UNLESS SPECIFIED OTHERWISE.
2. ALL RESISTOR VALUES ARE IN OHMS.
3. ALL INDUCTOR VALUES ARE IN uh.
4. [illegible] INDICATES PRINTED CIRCUIT BOARD INDUCTOR.
5. ⊘ DENOTES INTERNAL ADJUSTMENT.
6. * FACTORY SELECTED.

CHANGES:

① R16 WAS 59Ω ON S/N 011 THRU 036 AND 123 THRU 193

FIGURE 8-9. A7A1 INPUT FILTER PCB ASSEMBLY (6160A-1001)

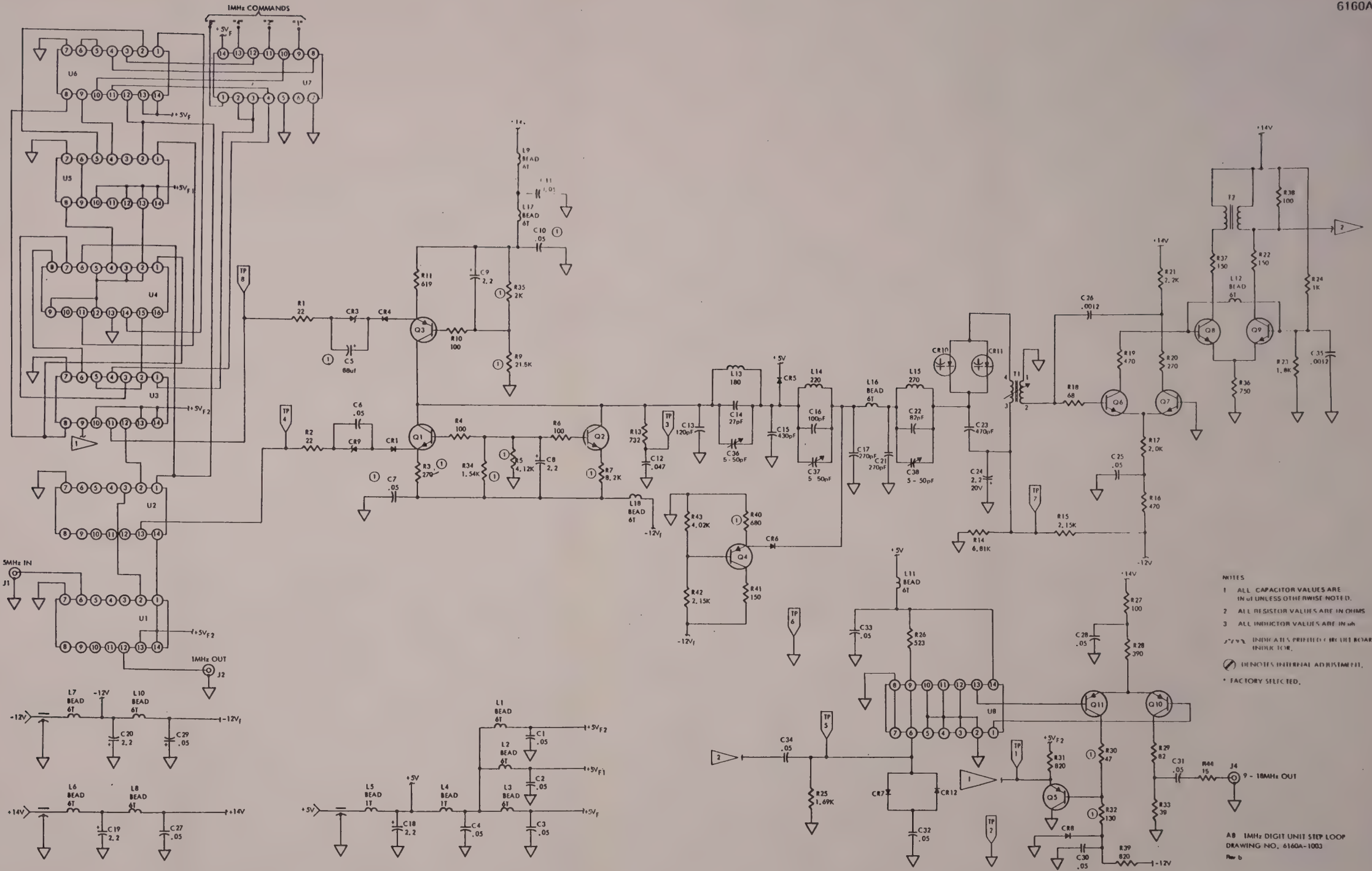

FIGURE 8-10. A8A1 1 MHz STEP LOOP PCB ASSEMBLY (6160A-1003)

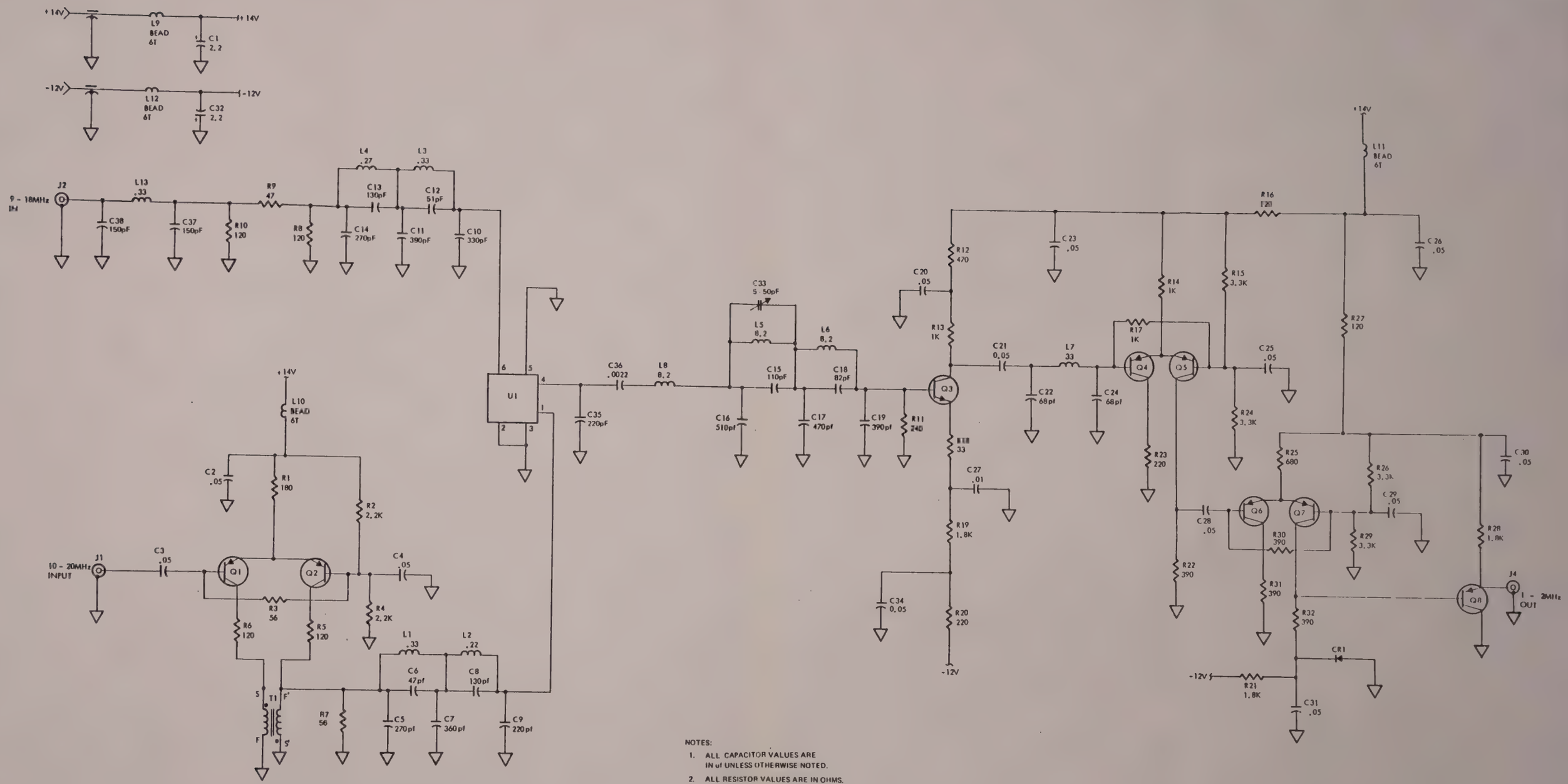

NOTES:

1. ALL CAPACITOR VALUES ARE IN uf UNLESS OTHERWISE NOTED.
2. ALL RESISTOR VALUES ARE IN OHMS.
3. ALL INDUCTOR VALUES ARE IN uh.

INDICATES PRINTED CIRCUIT BOARD INDUCTOR.

DENOTES INTERNAL ADJUSTMENT.

* FACTORY SELECTED.

FIGURE 8-11. A9A1 1 MHz I.F. MIXER PCB ASSEMBLY (6160A-1004)

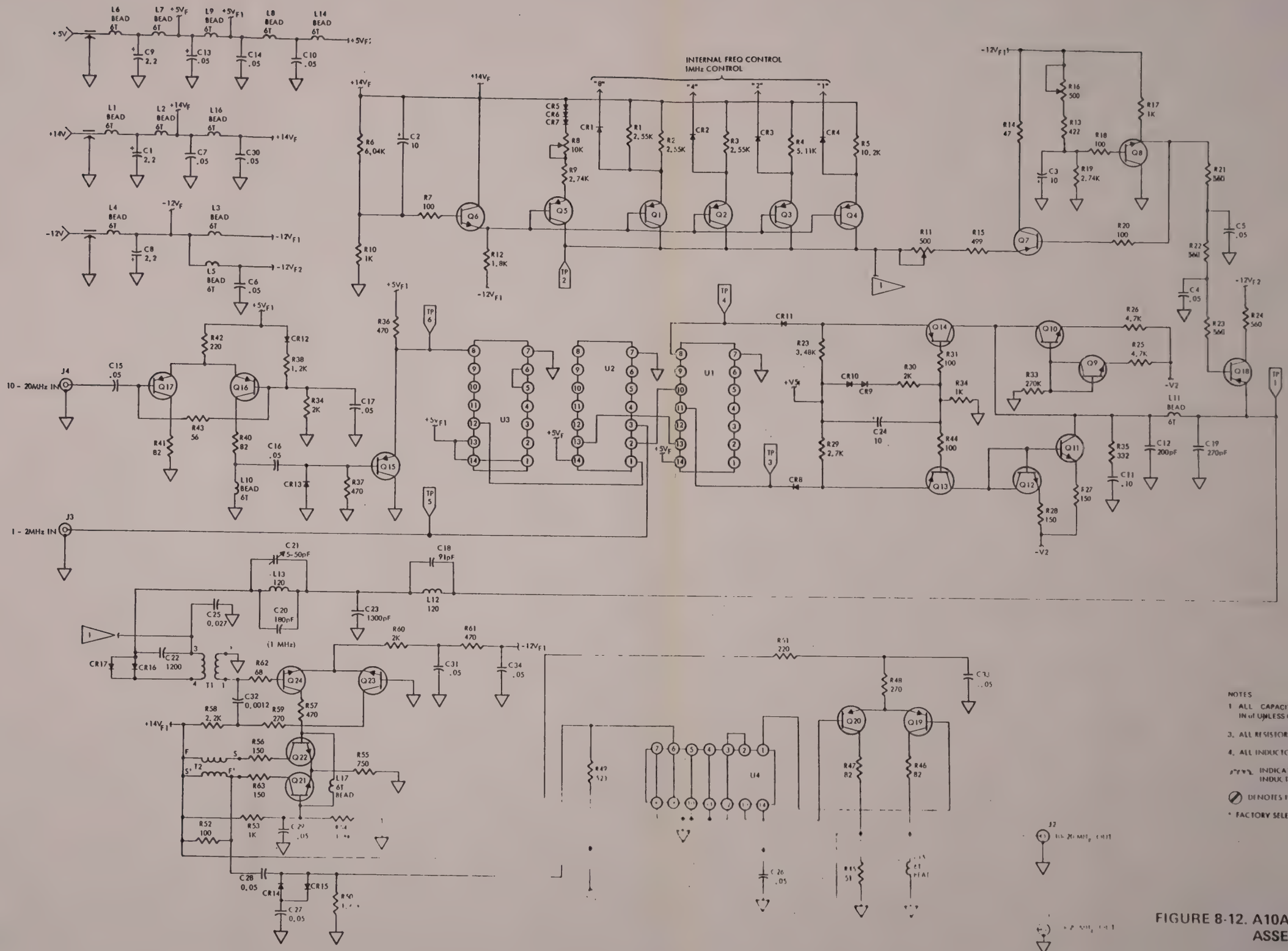

NOTES

1. ALL CAPACITOR VALUES ARE IN uf UNLESS OTHERWISE NOTED
3. ALL RESISTOR VALUES ARE IN OHMS.
4. ALL INDUCTOR VALUES ARE IN uh.
"6T" INDICATES PRINTED CIRCUIT BOARD INDUCTOR.
⊘ DENOTES INTERNAL ADJUSTMENT.
* FACTORY SELECTED.

FIGURE 8-12. A10A1 1 MHz MAIN LOOP PCB ASSEMBLY (6160A-1005)

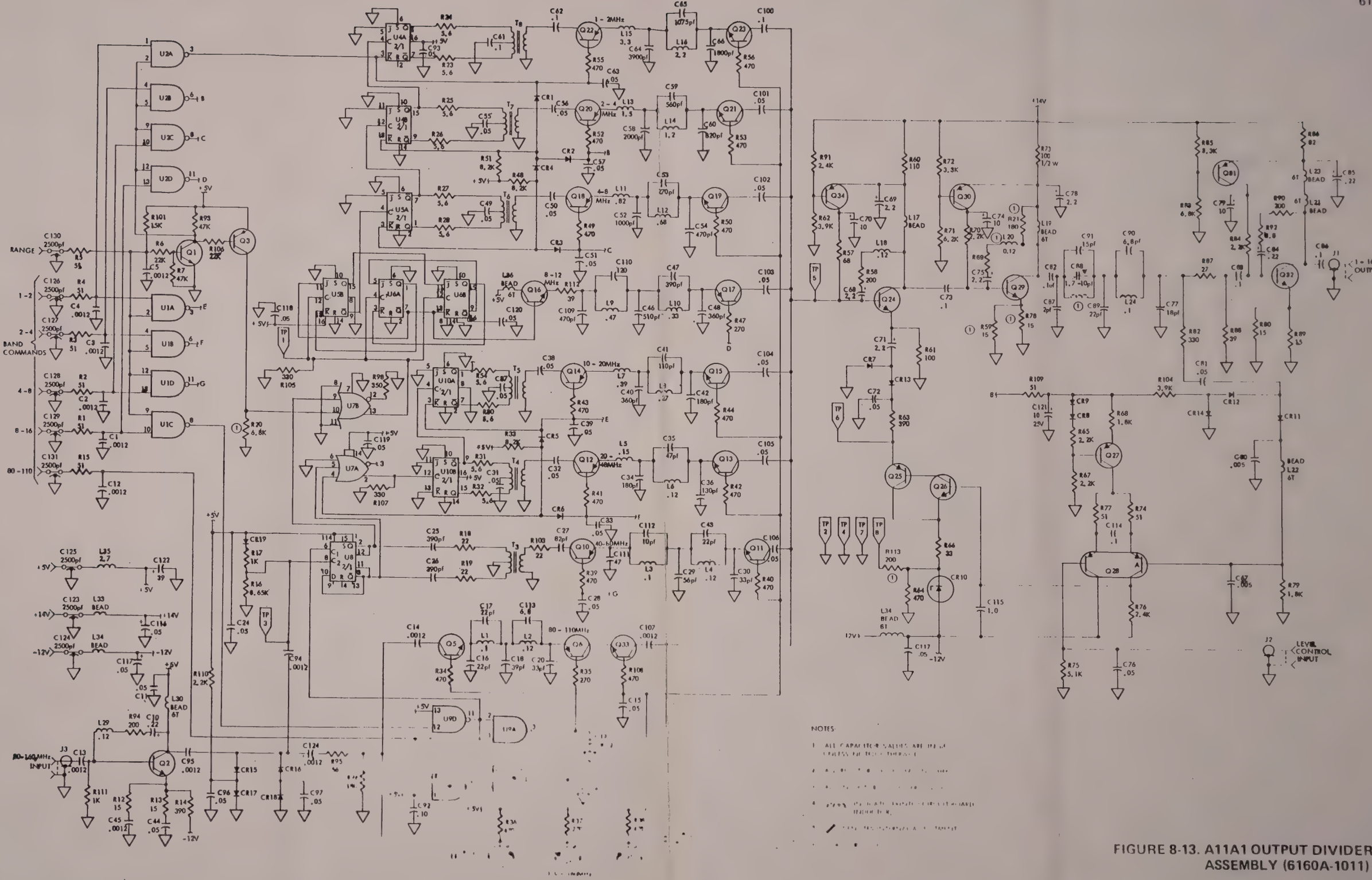

FIGURE 8-13. A11A1 OUTPUT DIVIDER PCB ASSEMBLY (6160A-1011)

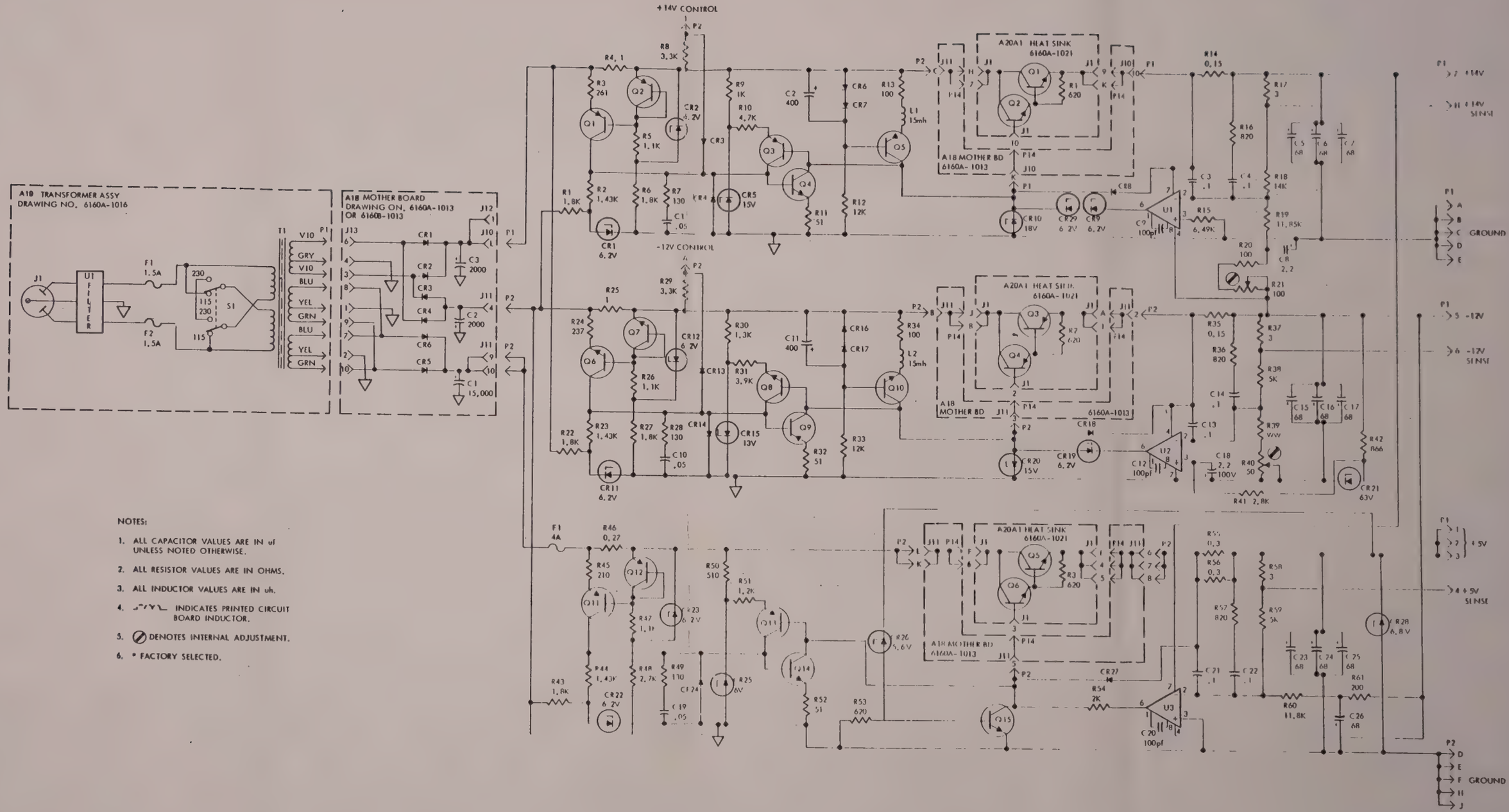

NOTES:

1. ALL CAPACITOR VALUES ARE IN uf UNLESS NOTED OTHERWISE.
2. ALL RESISTOR VALUES ARE IN OHMS.
3. ALL INDUCTOR VALUES ARE IN uh.
4. INDICATES PRINTED CIRCUIT BOARD INDUCTOR.
5. DENOTES INTERNAL ADJUSTMENT.
6. * FACTORY SELECTED.

FIGURE 8-14. A12 POWER SUPPLY PCB ASSEMBLY (6160A-1014)

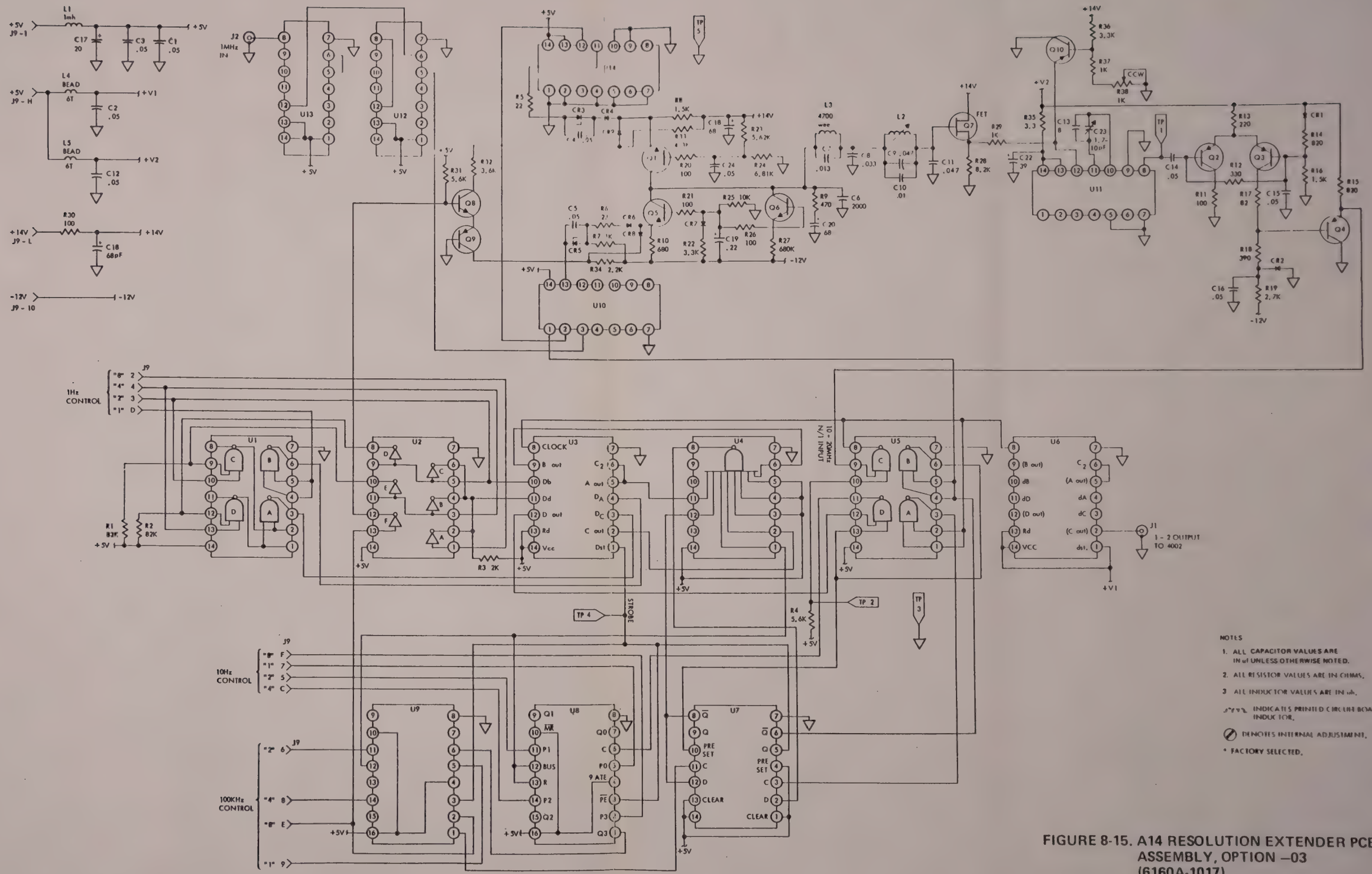

NOTES

1. ALL CAPACITOR VALUES ARE IN uf UNLESS OTHERWISE NOTED.
2. ALL RESISTOR VALUES ARE IN OHMS.
3. ALL INDUCTOR VALUES ARE IN uh.

INDICATES PRINTED CIRCUIT BOARD INDUCTOR.

DENOTES INTERNAL ADJUSTMENT.

* FACTORY SELECTED.

FIGURE 8-15. A14 RESOLUTION EXTENDER PCB ASSEMBLY, OPTION –03 (6160A-1017)

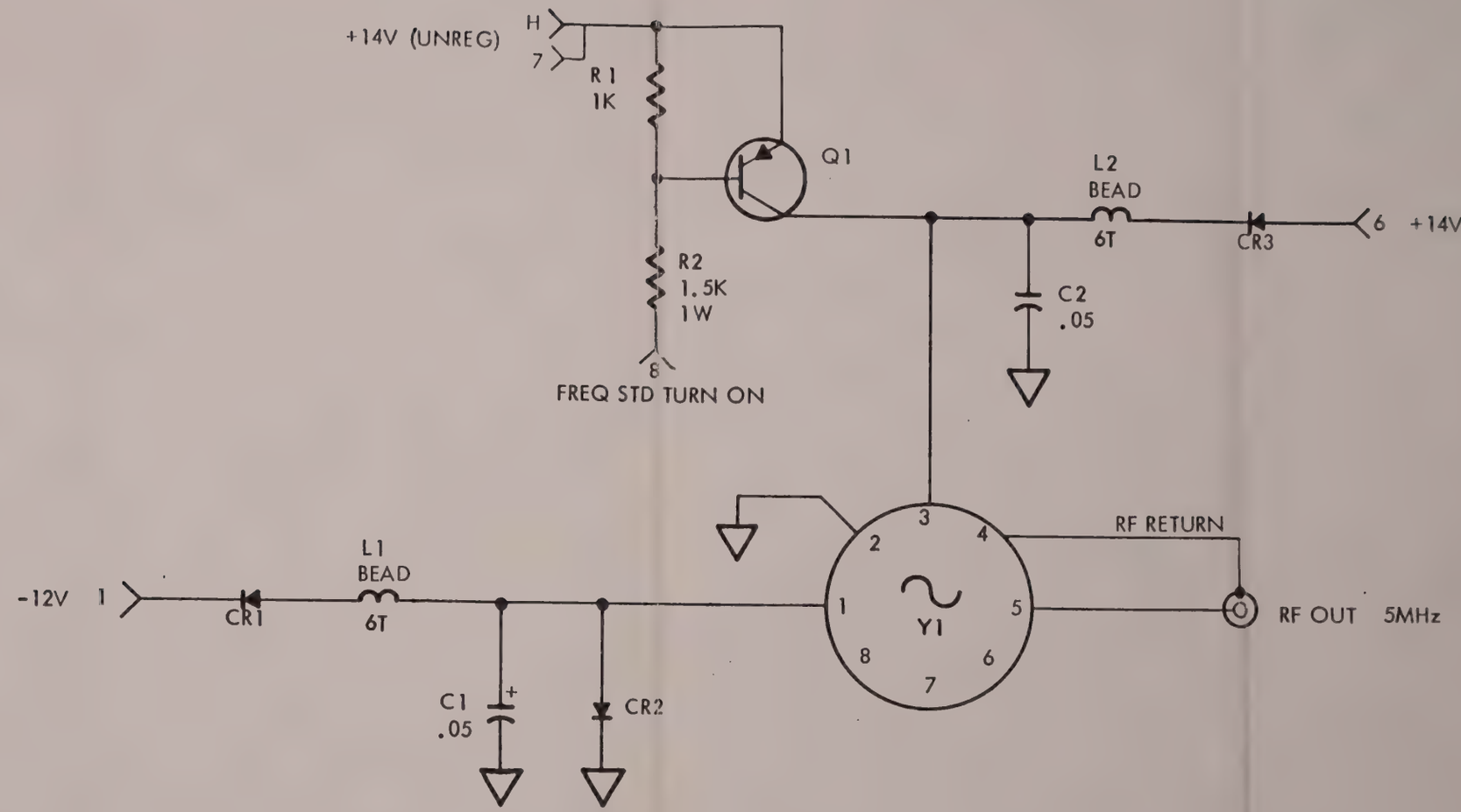

FIGURE 8-16. A15 INTERNAL FREQUENCY STANDARD ASSEMBLY, OPTION –01, –02 (6160A-1018)

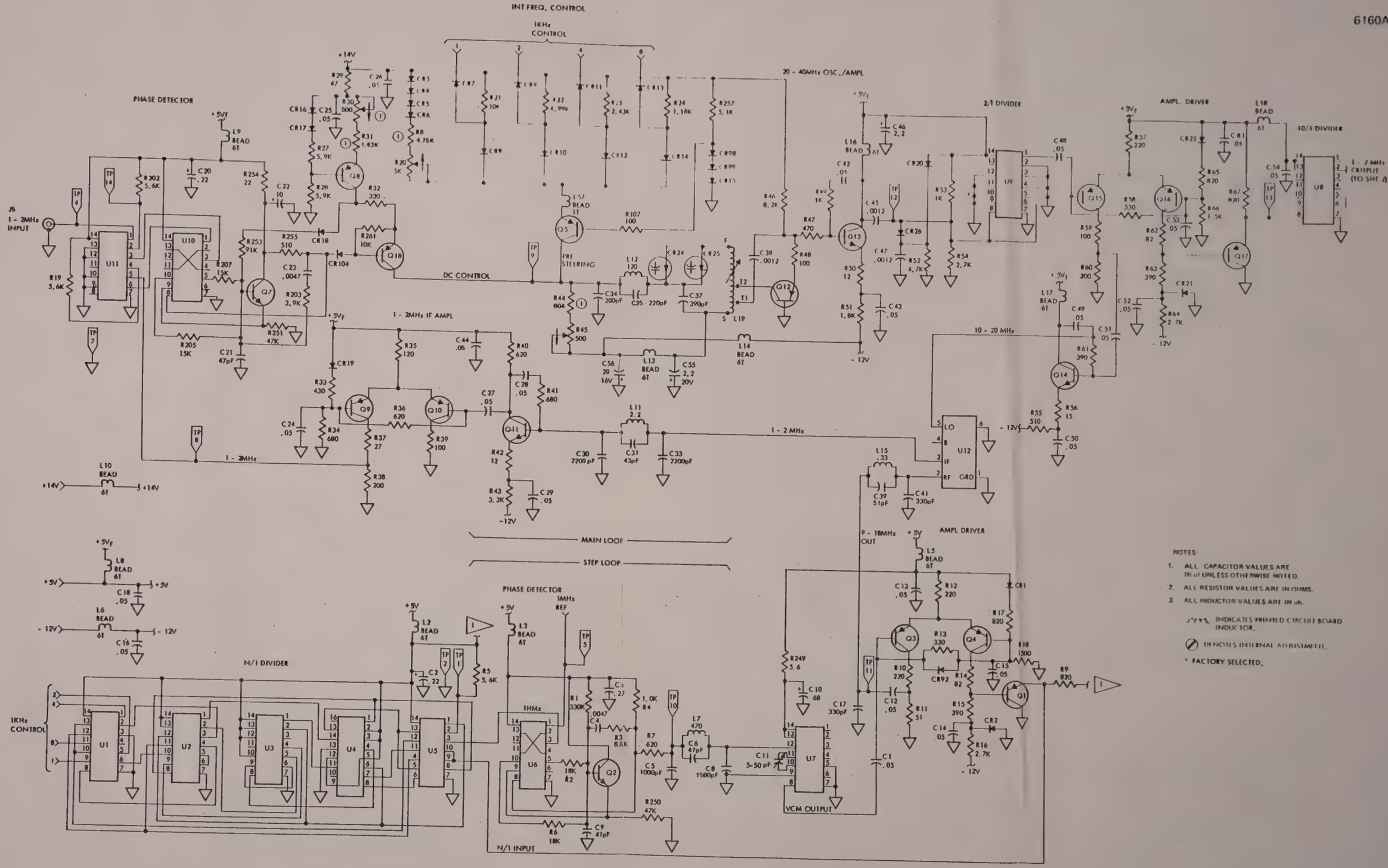

FIGURE 8-17. (1 of 3) A16 1 - 100 kHz DIGIT UNIT PCB ASSEMBLY (6160A-1002)

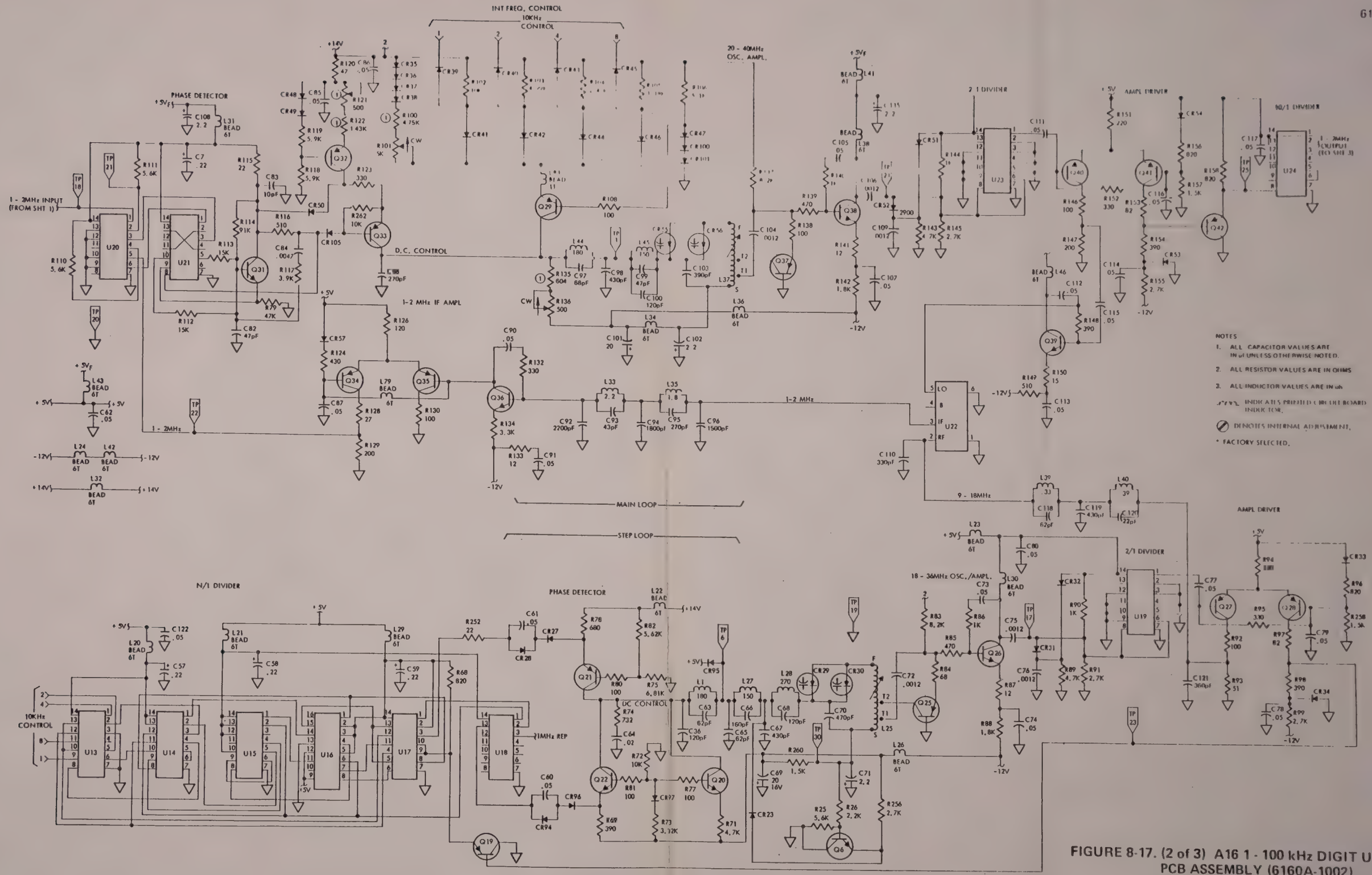

FIGURE 8-17. (2 of 3) A16 1 - 100 kHz DIGIT UNIT PCB ASSEMBLY (6160A-1002)

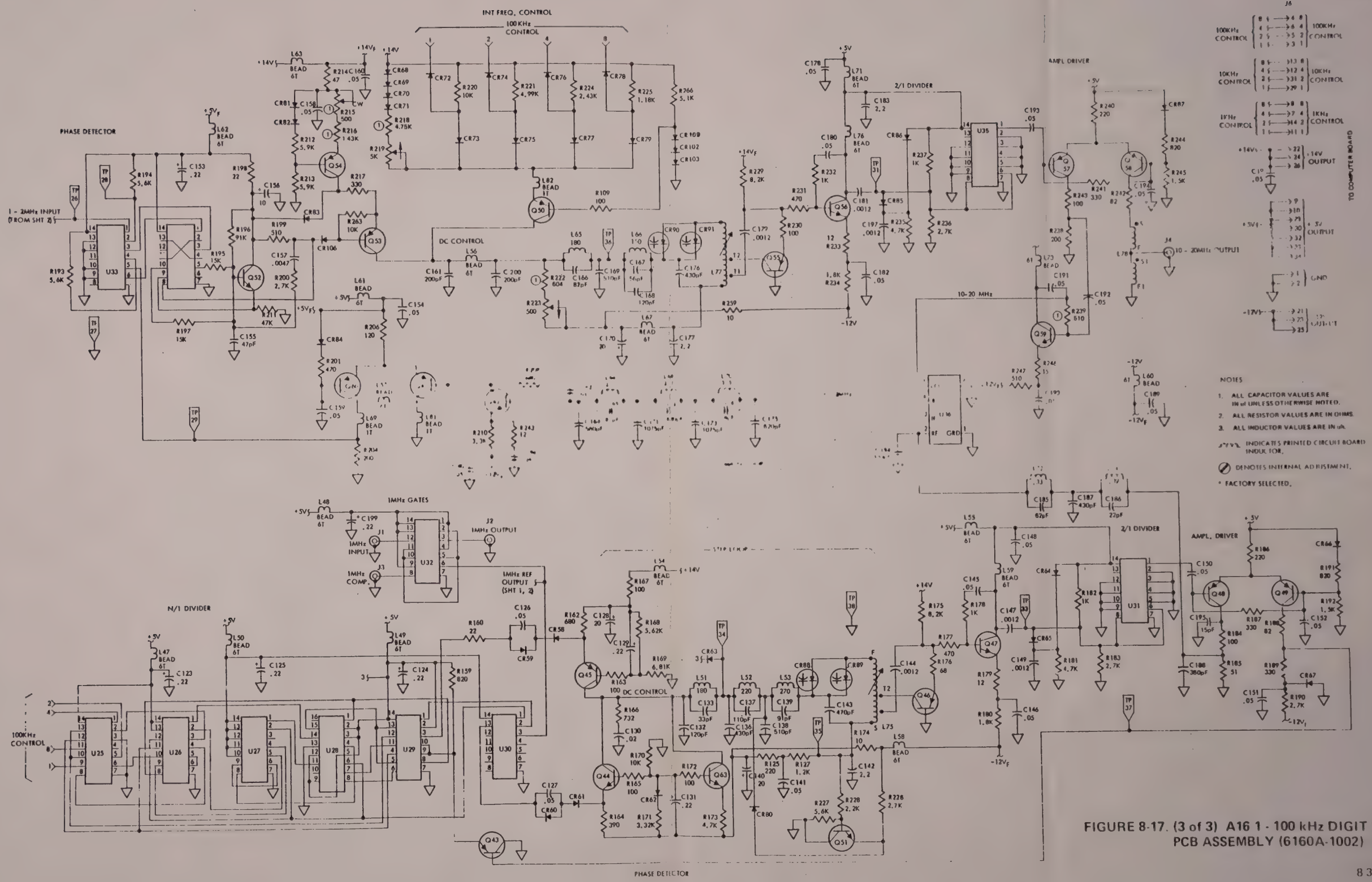

FIGURE 8-17. (3 of 3) A16 1 - 100 kHz DIGIT UNIT PCB ASSEMBLY (6160A-1002)

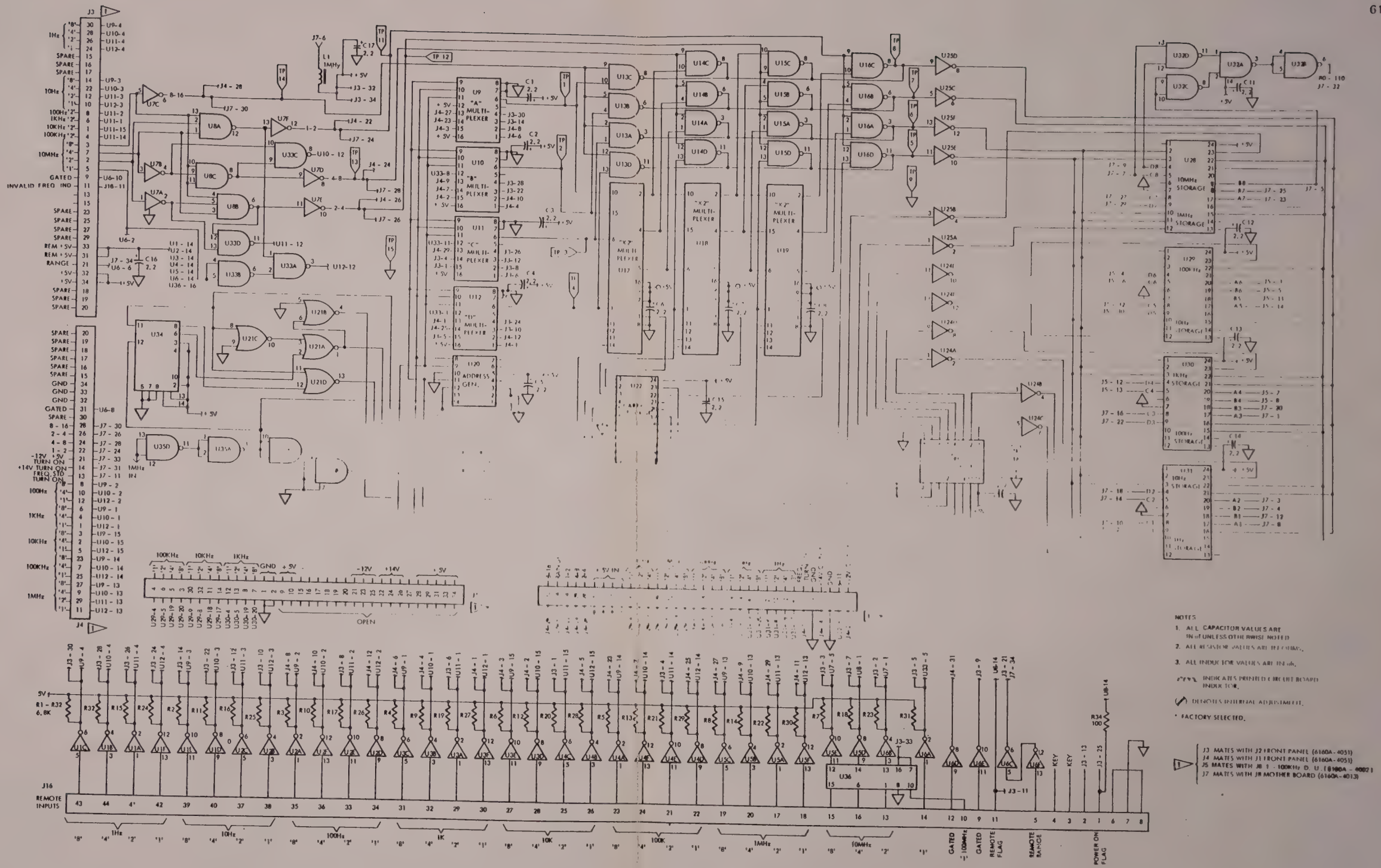

NOTES

1. ALL CAPACITOR VALUES ARE IN uF UNLESS OTHERWISE NOTED
2. ALL RESISTOR VALUES ARE IN OHMS.
3. ALL INDUCTOR VALUES ARE IN uh.

(*) INDICATES PRINTED CIRCUIT BOARD INDUCTOR.

DENOTES INTERNAL ADJUSTMENT.

* FACTORY SELECTED.

J3 MATES WITH J2 FRONT PANEL (6160A-4051)
J4 MATES WITH J1 FRONT PANEL (6160A-4051)
J5 MATES WITH J8 1 - 100KHz D. U. (6160A - 4002)
J7 MATES WITH J8 MOTHER BOARD (6160A-4013)

FIGURE 8-18. A17 COMPUTER PCB ASSEMBLY (6160A-1012)

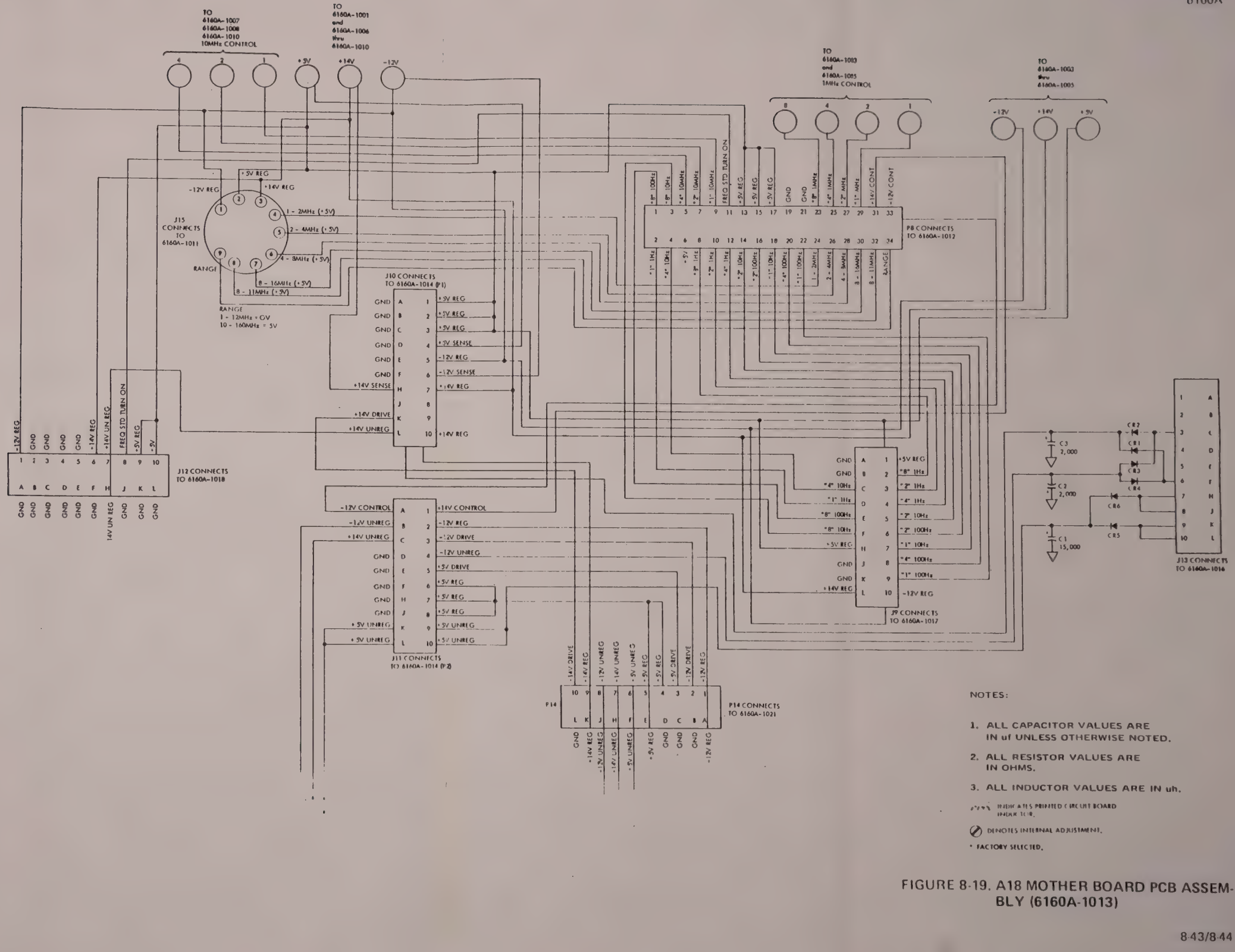

NOTES:

1. ALL CAPACITOR VALUES ARE IN uf UNLESS OTHERWISE NOTED.
2. ALL RESISTOR VALUES ARE IN OHMS.
3. ALL INDUCTOR VALUES ARE IN uh.

INDICATES PRINTED CIRCUIT BOARD EDGE TAB.

DENOTES INTERNAL ADJUSTMENT.

* FACTORY SELECTED.

FIGURE 8-19. A18 MOTHER BOARD PCB ASSEMBLY (6160A-1013)

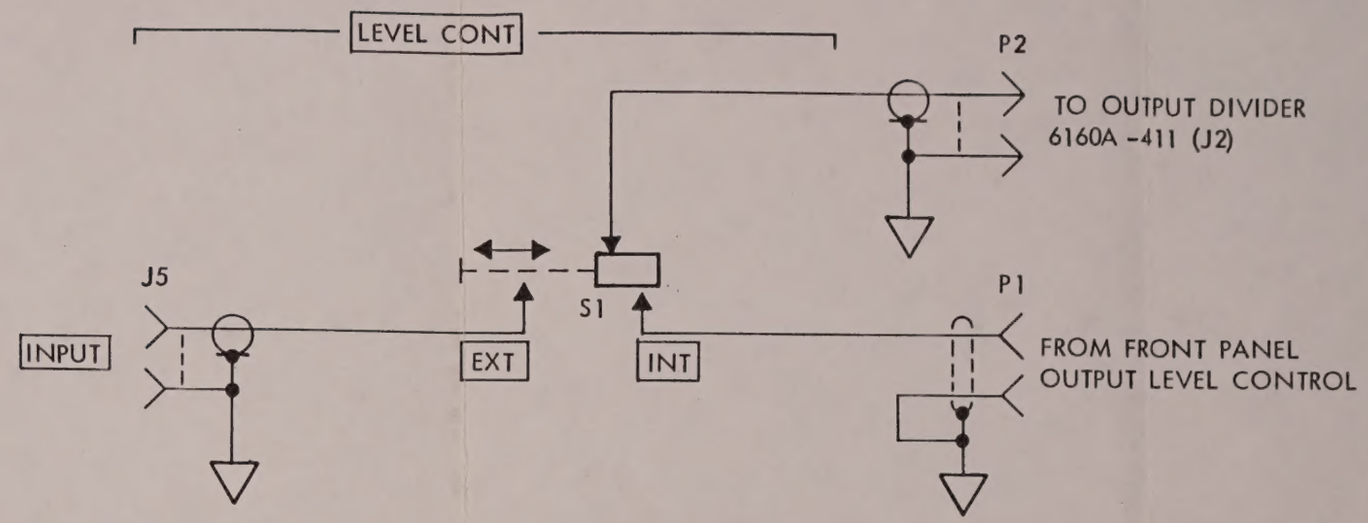

NOTES:

1. [ ] REAR PANEL DESIGNATION

FIGURE 8-20. A20 REAR PANEL ASSEMBLY (6160A-1052)